Hawkeye Pedershaab
Concrete Technologies Worldwide ™

M CON
PIPE & PRODUCTS INC

2691 Greenfield Road
Ayr, ON N0B 1E0 Canada

# Smartcast Basesection Designer. Order/Offer

| | |
|---|---|
| Customer | TRISAN CONSTRUCTION |
| Delivery address | BASEMENT FLOODING PROTECTION PROGRAM PHASE 4 ASSIGMENTS 39-10, 39-11 AND 39-13 |
| Project No. | |
| EPS Ø x H | 1524 / 1295 |

| | |
|---|---|
| Order no. | 25252_SD6_A |
| Date. | 10-09-2025 |
| Order Date | 10-09-2025 |
| Made by | mcon@mcon.com |

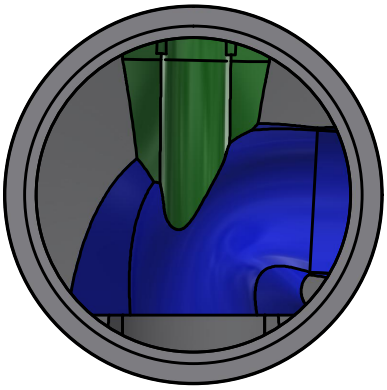

| | |
|---|---|
| Mould | 1524x152x1753 5,75' |
| Basesection | 1524x152x1753 5,75' |
| Height mm | 1874 |
| Bottom inserts mm | 229 |
| Benching Height mm | 610 |
| Benching Slope 0/00 | 125 |
| Weight kg | 6177 kg |

| | Main Inlet > | | 1 | | | |
|---|---|---|---|---|---|---|
| Outlet/Inlet | Outlet | Inlet 1 | Inlet 2 | Inlet 3 | Inlet 4 | Inlet 5 |
| Connections type | 600-24" Concrete | 300-12" PVC SDR 35 | 600-24" Concrete | | | |
| Gasket type | S306-34L | 16M PSX | S306-34L | | | |
| Dimension mm. | 610 | 299 | 610 | | | |
| Angle 360° | 0 | 181 | 273 | | | |
| Invert Level mm. | 0 | 258 | 70 | | | |
| 2. Invert Level mm. | | 150 | 70 | | | |
| Socket angle 0/00 | | | | | | |
| Channel Drop mm | | 150 | 70 | | | |
| Straight section mm | | 50 | 50 | | | |
| Note | | | | | | |

| | |
|---|---|
| Approved by. | |
| Control | |
| Date | |

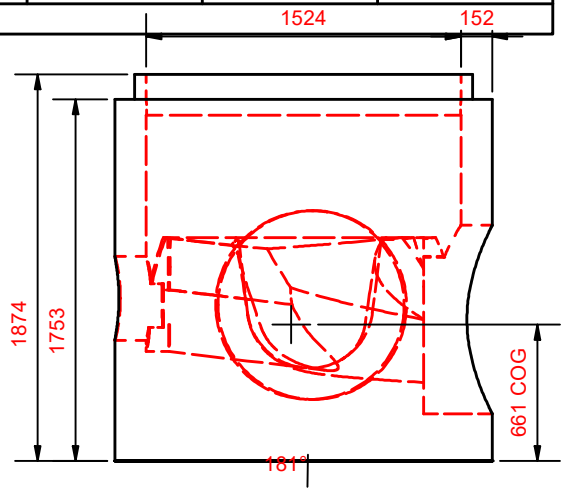


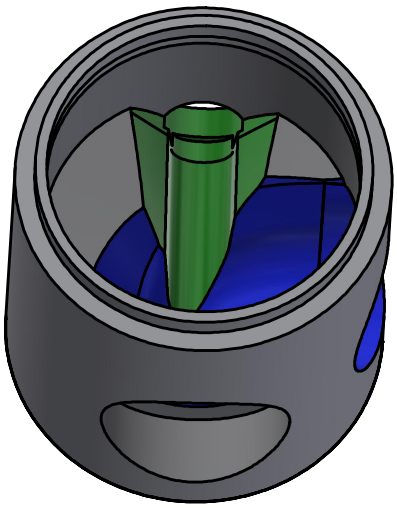

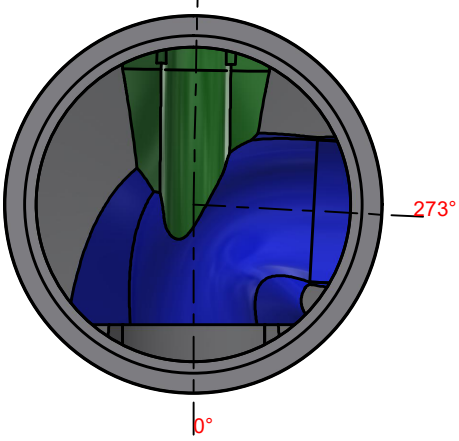

Hawkeye Pedershaab
Concrete Technologies Worldwide ™

M CON
PIPE & PRODUCTS INC

2691 Greenfield Road
Ayr, ON N0B 1E0 Canada

## Smartcast Basesection Designer.

| | |
|---|---|
| Customer | TRISAN CONSTRUCTION |
| Delivery address | BASEMENT FLOODING PROTECTION PROGRAM PHASE 4 ASSIGMENTS |
| Project No. | 39-10, 39-11 AND 39-13 |
| | |
| Basesection | 1524x152x1753 5,75' |
| Order no. | 25252_SD6_A |
| Order Date | 10-09-2025 |
| Weight kg | 6177 kg |

| | |
|---|---|
| Center of gravity | 661 |
| EPS raw height | 1295 |
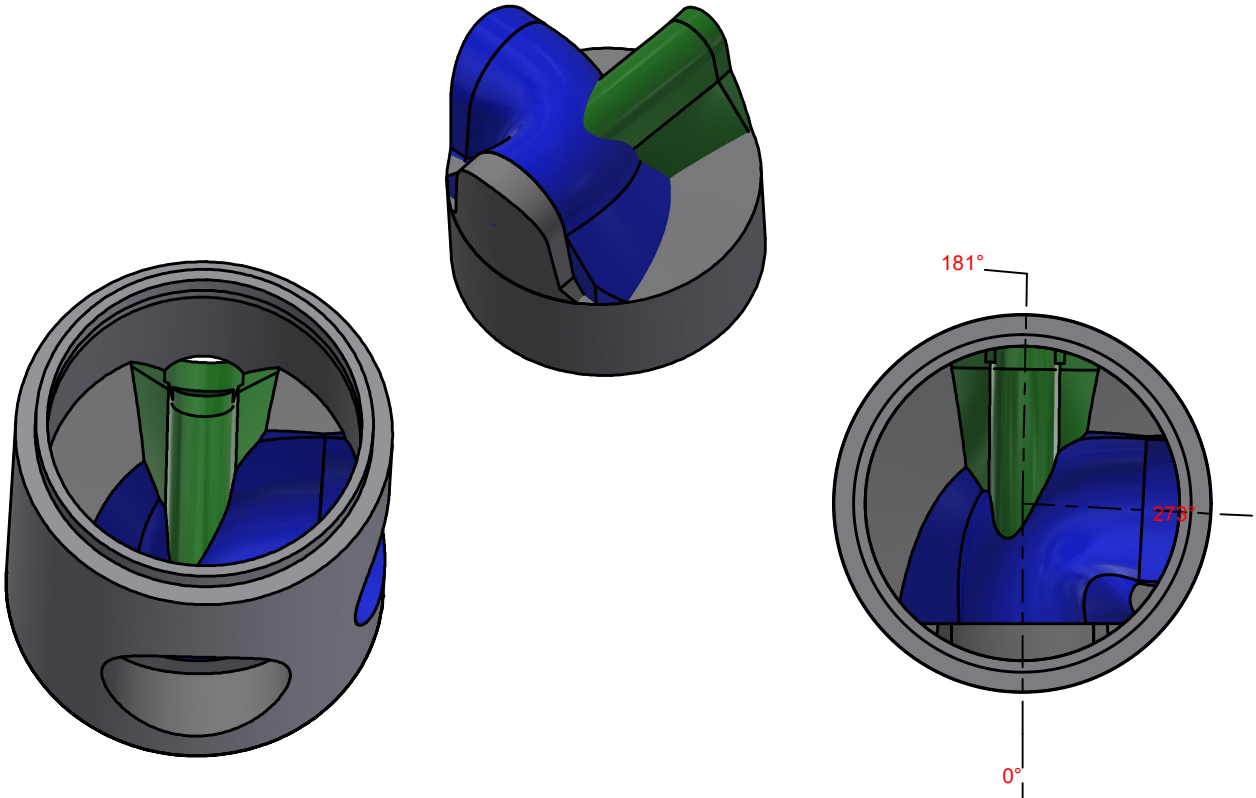
| | Main Inlet > | | 1 | | | |
|---|---|---|---|---|---|---|
| Outlet/Inlet | Outlet | Inlet 1 | Inlet 2 | Inlet 3 | Inlet 4 | Inlet 5 |
| Angle 360° | 0 | 181 | 273 | | | |
| Invert Level mm. | 0 | 258 | 70 | | | |
| Connections type | 600-24" Concrete | 300-12" PVC SDR 35 | 600-24" Concrete | | | |