Hawkeye Pedershaab
Concrete Technologies Worldwide ™

M CON
PIPE & PRODUCTS INC

2691 Greenfield Road
Ayr, ON N0B 1E0 Canada

Smartcast Basesection Designer. Order/Offer

Customer	G. MELO EXCAVATING LTD
Delivery address	
Project No.	77 VICTORIA RD N
EPS Ø x H	1220 / 407

Order no.	25362_MH3A_A
Date.	03-11-2025
Order Date	03-11-2025
Made by	mcon@mcon.com

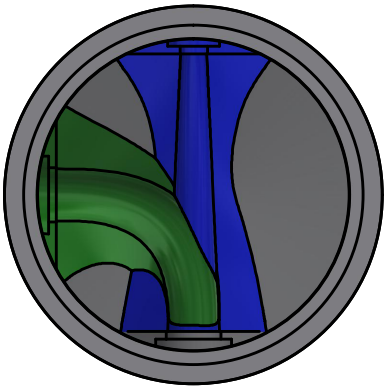

Mould	1220x127x686 2,25'
Basesection	1220x127x686 2,25'
Height mm	794
Bottom inserts mm	152
Benching Height mm	101
Benching Slope 0/00	125
Weight kg	2006 kg

	Main Inlet >		1			
Outlet/Inlet	Outlet	Inlet 1	Inlet 2	Inlet 3	Inlet 4	Inlet 5
Connections type	200-8" PVC SDR 35	200-8" PVC SDR 35	100-4" PVC SDR 28			
Gasket type	12-08 PSX	12-08 PSX	8QRS PSX			
Dimension mm.	201	201	101			
Angle 360°	0	90	180			
Invert Level mm.	0	60	150			
2. Invert Level mm.		60	150			
Socket angle 0/00						
Channel Drop mm		60	150			
Straight section mm		50	50			
Note						

Approved by.	
Control	
Date	

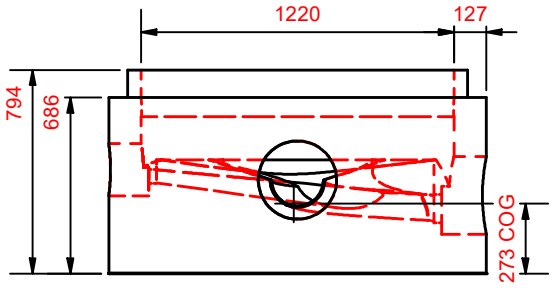

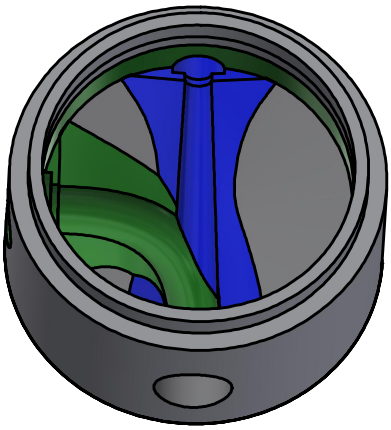

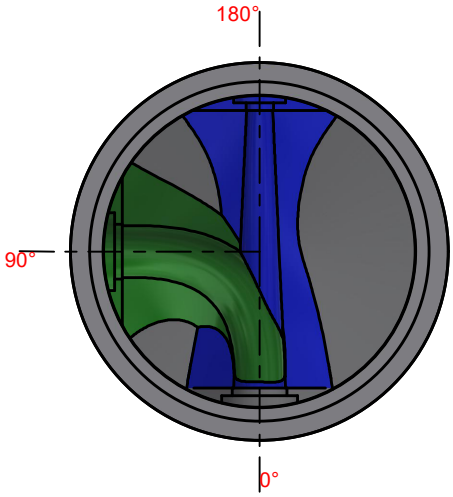

Hawkeye Pedershaab
Concrete Technologies Worldwide ™

M CON
PIPE & PRODUCTS INC

2691 Greenfield Road
Ayr, ON N0B 1E0 Canada

Smartcast Basesection Designer.

Customer	**G. MELO EXCAVATING LTD**
Delivery address	
Project No.	**77 VICTORIA RD N**
Basesection	**1220x127x686 2,25'**
Order no.	**25362_MH3A_A**
Order Date	**03-11-2025**
Weight kg	**2006 kg**

Center of gravity	273
EPS raw height	407
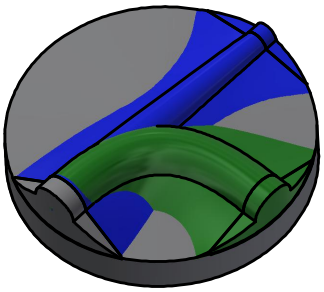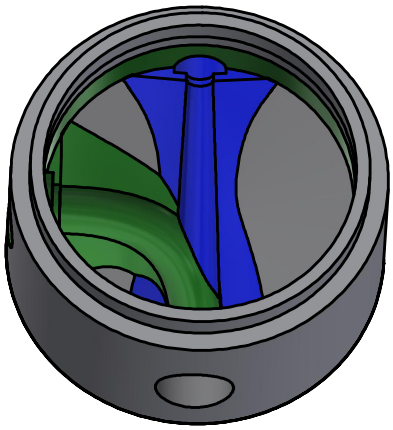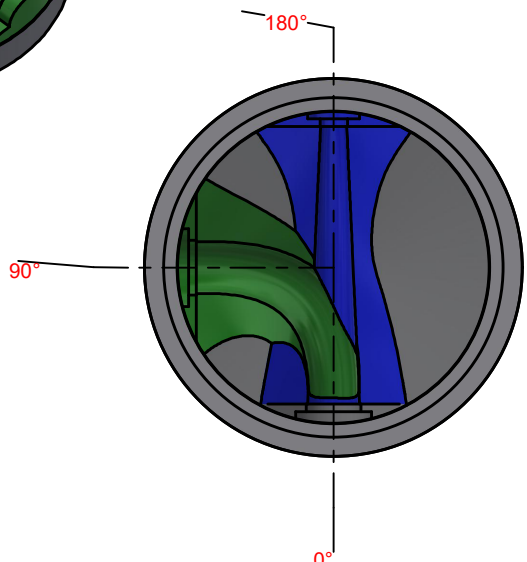
	Main Inlet >		1			
Outlet/Inlet	Outlet	Inlet 1	Inlet 2	Inlet 3	Inlet 4	Inlet 5
Angle 360°	0	90	180			
Invert Level mm.	0	60	150			
Connections type	200-8" PVC SDR 35	200-8" PVC SDR 35	100-4" PVC SDR 28