Hawkeye Pedershaab
Concrete Technologies Worldwide ™

M CON
PIPE & PRODUCTS INC

2691 Greenfield Road
Ayr, ON N0B 1E0 Canada

# Smartcast Basesection Designer. Order/Offer

| | |
|---|---|
| Customer | G. MELO EXCAVATING LTD |
| Delivery address | |
| Project No. | ALMA GUELPH PHASE 2 |
| | |
| | |
| EPS Ø x H | 1220 / 712 |

| | |
|---|---|
| Order no. | 25369_MH1A_A |
| Date. | 28-11-2025 |
| Order Date | 28-11-2025 |
| Made by | mcon@mcon.com |

| | |
|---|---|
| Mould | 1220x127x991 3,25' |
| Basesection | 1220x127x991 3,25' |
| Height mm | 1099 |
| Bottom inserts mm | 152 |
| Benching Height mm | 101 |
| Benching Slope 0/00 | 125 |
| Weight kg | 2477 kg |

| | Main Inlet > | 1 | | | | |
|---|---|---|---|---|---|---|
| Outlet/Inlet | Outlet | Inlet 1 | Inlet 2 | Inlet 3 | Inlet 4 | Inlet 5 |
| Connections type | 200-8" PVC SDR 35 | 200-8" PVC SDR 35 | | | | |
| Gasket type | 12-08 PSX | 12-08 PSX | | | | |
| Dimension mm. | 201 | 201 | | | | |
| Angle 360° | 0 | 124 | | | | |
| Invert Level mm. | 0 | 200 | | | | |
| 2. Invert Level mm. | | 150 | | | | |
| Socket angle 0/00 | | | | | | |
| Channel Drop mm | | 150 | | | | |
| Straight section mm | | 50 | | | | |
| Note | | | | | | |

| | |
|---|---|
| Approved by. | |
| | |
| Control | |
| | |
| Date | |
| | |

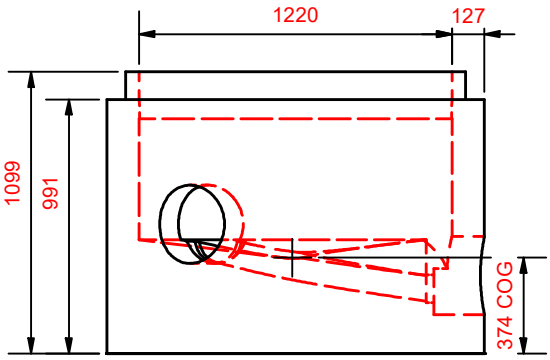


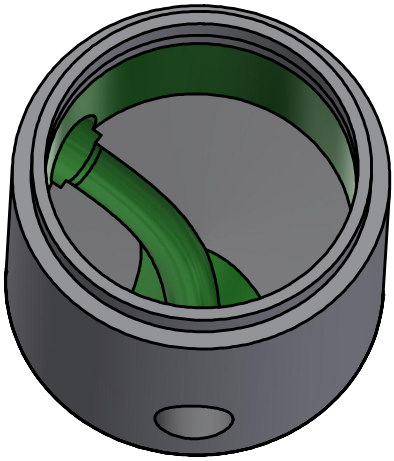

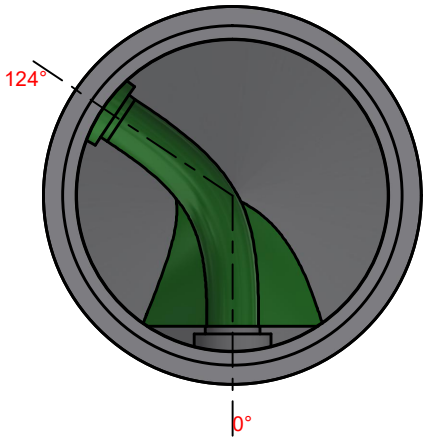

Hawkeye Pedershaab
Concrete Technologies Worldwide ™

M CON
PIPE & PRODUCTS INC

2691 Greenfield Road
Ayr, ON N0B 1E0 Canada

## Smartcast Basesection Designer.

| | |
|---|---|
| Customer | **G. MELO EXCAVATING LTD** |
| Delivery address | |
| Project No. | **ALMA GUELPH PHASE 2** |
| | |
| | |
| Basesection | **1220x127x991 3,25'** |
| Order no. | **25369_MH1A_A** |
| Order Date | **28-11-2025** |
| Weight kg | **2477 kg** |

| | |
|---|---|
| Center of gravity | 374 |
| EPS raw height | 712 |
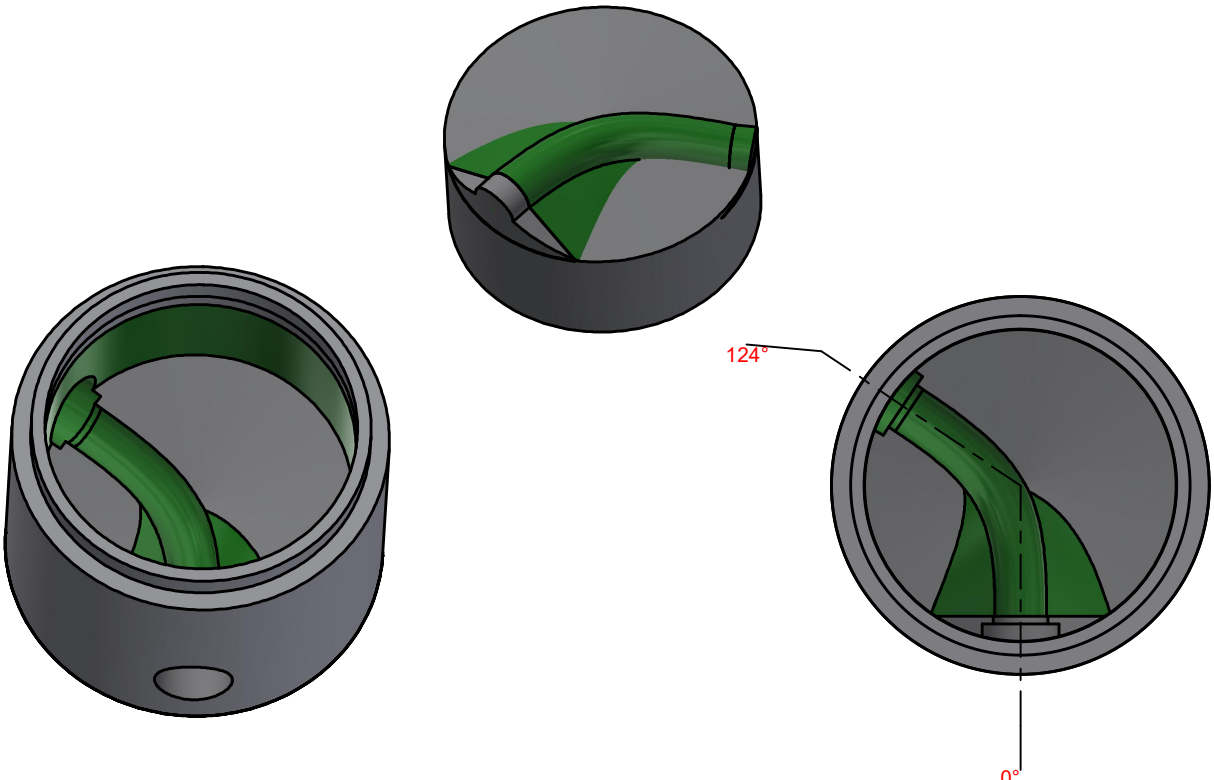
| | Main Inlet > | 1 | | | | |
|---|---|---|---|---|---|---|
| Outlet/Inlet | Outlet | Inlet 1 | Inlet 2 | Inlet 3 | Inlet 4 | Inlet 5 |
| Angle 360° | 0 | 124 | | | | |
| Invert Level mm. | 0 | 200 | | | | |
| Connections type | 200-8" PVC SDR 35 | 200-8" PVC SDR 35 | | | | |