Hawkeye Pedershaab
Concrete Technologies Worldwide ™

M CON
PIPE & PRODUCTS INC

2691 Greenfield Road
Ayr, ON N0B 1E0 Canada

Smartcast Basesection Designer. Order/Offer

Customer	G. MELO EXCAVATING LTD
Delivery address	
Project No.	ALMA GUELPH PHASE 2
EPS Ø x H	1220 / 634,5

Order no.	25369_MH3A_A
Date.	15-12-2025
Order Date	15-12-2025
Made by	mcon@mcon.com

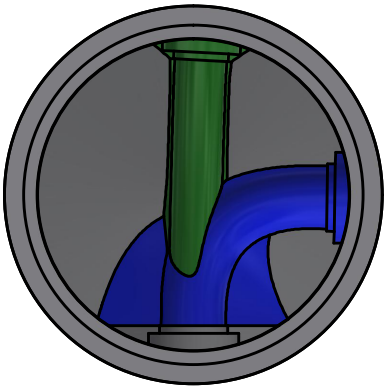

Mould	1220x127x914 3'
Basesection	1220x127x914 3'
Height mm	1022
Bottom inserts mm	152
Benching Height mm	126
Benching Slope 0/00	125
Weight kg	2343 kg

	Main Inlet >		1			
Outlet/Inlet	Outlet	Inlet 1	Inlet 2	Inlet 3	Inlet 4	Inlet 5
Connections type	250-10" PVC SDR 35	200-8" PVC SDR 35	250-10" PVC SDR 35			
Gasket type	14M PSX	12-08 PSX	14M PSX			
Dimension mm.	251	201	251			
Angle 360°	0	183	271			
Invert Level mm.	0	150	150			
2. Invert Level mm.		150	150			
Socket angle 0/00						
Channel Drop mm		150	150			
Straight section mm		50	50			
Note						

Approved by.	
Control	
Date	

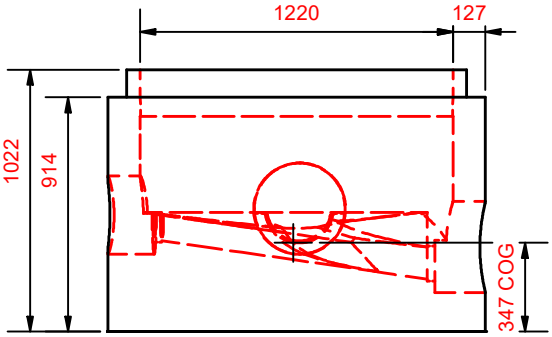

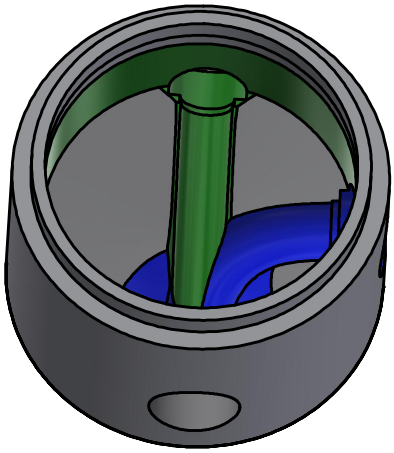

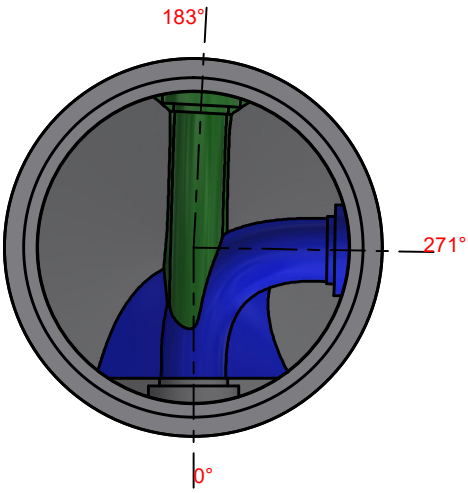

Hawkeye Pedershaab
Concrete Technologies Worldwide ™

M CON
PIPE & PRODUCTS INC

2691 Greenfield Road
Ayr, ON N0B 1E0 Canada

Smartcast Basesection Designer.

Customer	**G. MELO EXCAVATING LTD**
Delivery address	
Project No.	**ALMA GUELPH PHASE 2**
Basesection	**1220x127x914 3'**
Order no.	**25369_MH3A_A**
Order Date	**15-12-2025**
Weight kg	**2343 kg**

Center of gravity	347
EPS raw height	634,5
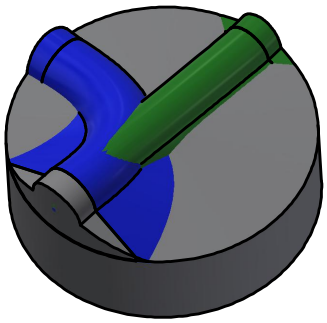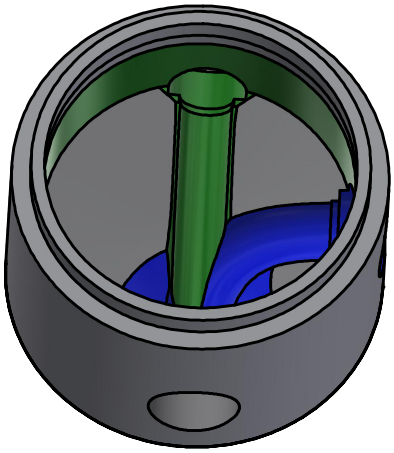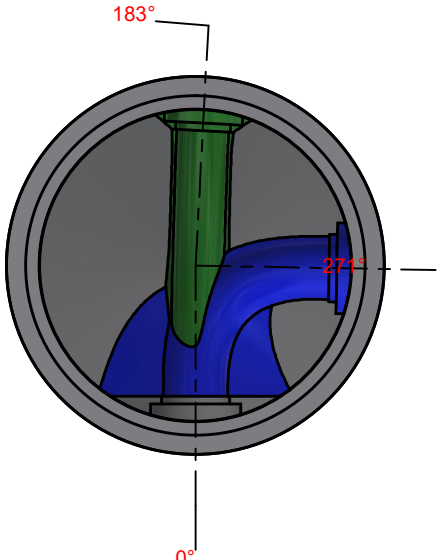
	Main Inlet >		1			
Outlet/Inlet	Outlet	Inlet 1	Inlet 2	Inlet 3	Inlet 4	Inlet 5
Angle 360°	0	183	271			
Invert Level mm.	0	150	150			
Connections type	250-10" PVC SDR 35	200-8" PVC SDR 35	250-10" PVC SDR 35