Hawkeye Pedershaab
Concrete Technologies Worldwide ™

M CON
PIPE & PRODUCTS INC

2691 Greenfield Road
Ayr, ON N0B 1E0 Canada

Smartcast Basesection Designer. Order/Offer

Customer	G. MELO EXCAVATING LTD
Delivery address	
Project No.	ALMA GUELPH PHASE 2
EPS Ø x H	1220 / 558,5

Order no.	25369_MH4A_A
Date.	15-12-2025
Order Date	15-12-2025
Made by	mcon@mcon.com

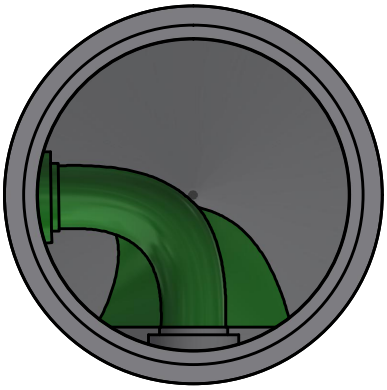

Mould	1220x127x838 2,75'
Basesection	1220x127x838 2,75'
Height mm	946
Bottom inserts mm	152
Benching Height mm	126
Benching Slope 0/00	125
Weight kg	2298 kg

	Main Inlet >	1				
Outlet/Inlet	Outlet	Inlet 1	Inlet 2	Inlet 3	Inlet 4	Inlet 5
Connections type	250-10" PVC SDR 35	250-10" PVC SDR 35				
Gasket type	14M PSX	14M PSX				
Dimension mm.	251	251				
Angle 360°	0	89				
Invert Level mm.	0	150				
2. Invert Level mm.		150				
Socket angle 0/00						
Channel Drop mm		150				
Straight section mm		50				
Note						

Approved by.	
Control	
Date	

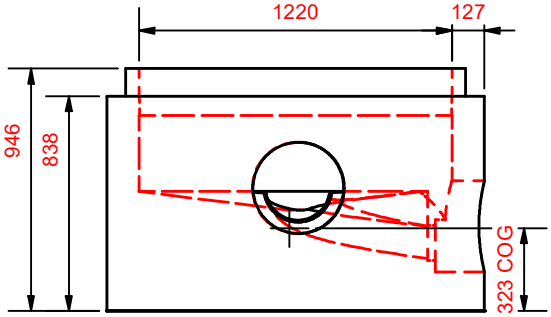

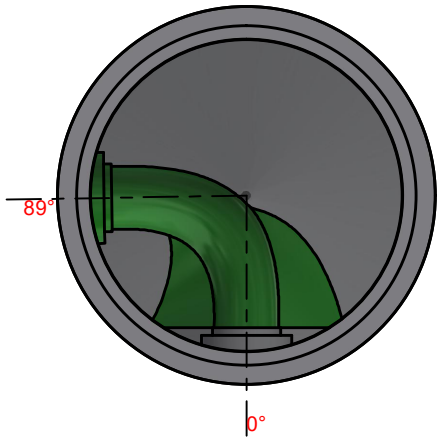

Hawkeye Pedershaab
Concrete Technologies Worldwide ™

M CON
PIPE & PRODUCTS INC

2691 Greenfield Road
Ayr, ON N0B 1E0 Canada

Smartcast Basesection Designer.

Customer	**G. MELO EXCAVATING LTD**
Delivery address	
Project No.	**ALMA GUELPH PHASE 2**
Basesection	**1220x127x838 2,75'**
Order no.	**25369_MH4A_A**
Order Date	**15-12-2025**
Weight kg	**2298 kg**

Center of gravity	323
EPS raw height	558,5
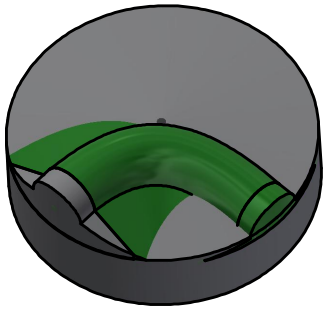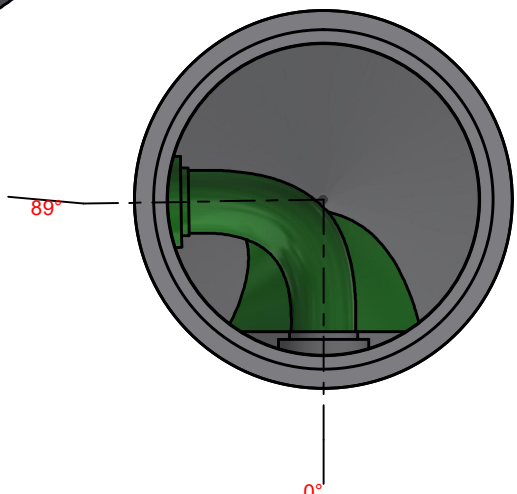
	Main Inlet >	1				
Outlet/Inlet	Outlet	Inlet 1	Inlet 2	Inlet 3	Inlet 4	Inlet 5
Angle 360°	0	89				
Invert Level mm.	0	150				
Connections type	250-10" PVC SDR 35	250-10" PVC SDR 35