Hawkeye Pedershaab
Concrete Technologies Worldwide ™

M CON
PIPE & PRODUCTS INC

2691 Greenfield Road
Ayr, ON N0B 1E0 Canada

# Smartcast Basesection Designer. Order/Offer

| | |
|---|---|
| Customer | TRISAN CONSTRUCTION |
| Delivery address | BASEMENT FLOODING PROTECTION PROGRAM PHASE 4 ASSIGNMENTS 41-03 & 41-06 |
| Project No. | |
| EPS Ø x H | 1524 / 1078,5 |

| | |
|---|---|
| Order no. | 25694_AR02_A |
| Date. | 23-02-2026 |
| Order Date | 23-02-2026 |
| Made by | mcon@mcon.com |

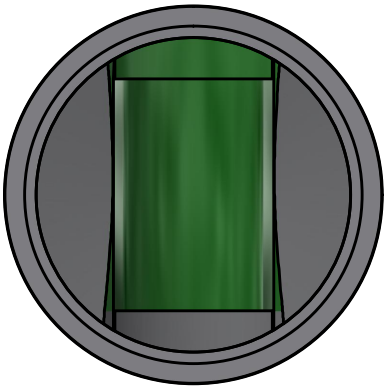

| | |
|---|---|
| Mould | 1524x152x1524 5' |
| Basesection | 1524x152x1524 5' |
| Height mm | 1645 |
| Bottom inserts mm | 229 |
| Benching Height mm | 685 |
| Benching Slope 0/00 | 125 |
| Weight kg | 5734 kg |

| | Main Inlet > | 1 | | | | |
|---|---|---|---|---|---|---|
| Outlet/Inlet | Outlet | Inlet 1 | Inlet 2 | Inlet 3 | Inlet 4 | Inlet 5 |
| Connections type | 675-27" Concrete | 675-27" Concrete | | | | |
| Gasket type | S306-38L | S306-38L | | | | |
| Dimension mm. | 686 | 686 | | | | |
| Angle 360° | 0 | 180 | | | | |
| Invert Level mm. | 0 | 30 | | | | |
| 2. Invert Level mm. | | 30 | | | | |
| Socket angle 0/00 | | | | | | |
| Channel Drop mm | | 30 | | | | |
| Straight section mm | | 50 | | | | |
| Note | | | | | | |

| | |
|---|---|
| Approved by. | |
| Control | |
| Date | |

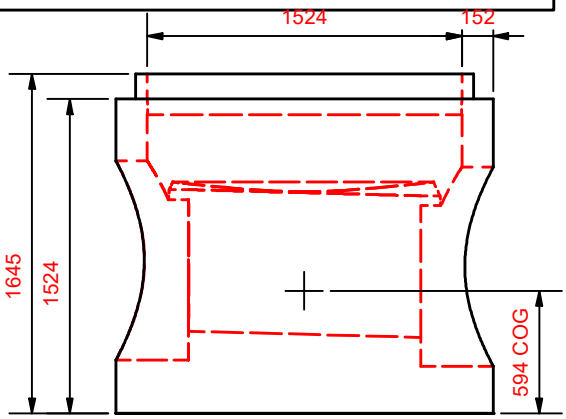


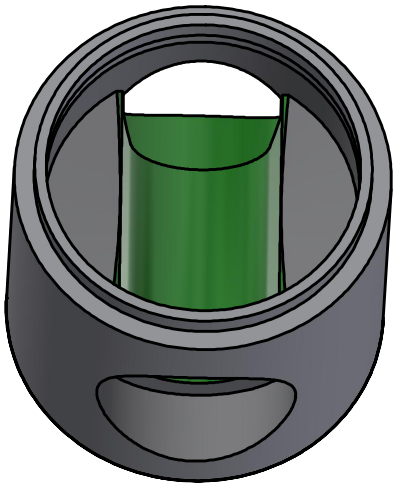

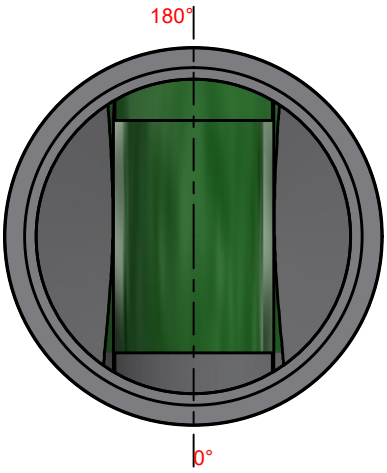

Hawkeye Pedershaab
Concrete Technologies Worldwide ™

M CON
PIPE & PRODUCTS INC

2691 Greenfield Road
Ayr, ON N0B 1E0 Canada

## Smartcast Basesection Designer.

| | |
|---|---|
| Customer | TRISAN CONSTRUCTION |
| Delivery address | BASEMENT FLOODING PROTECTION PROGRAM PHASE 4 ASSIGNMENTS |
| Project No. | 41-03 & 41-06 |
| | |
| Basesection | 1524x152x1524 5' |
| Order no. | 25694_AR02_A |
| Order Date | 23-02-2026 |
| Weight kg | 5734 kg |

| | |
|---|---|
| Center of gravity | 594 |
| EPS raw height | 1078,5 |
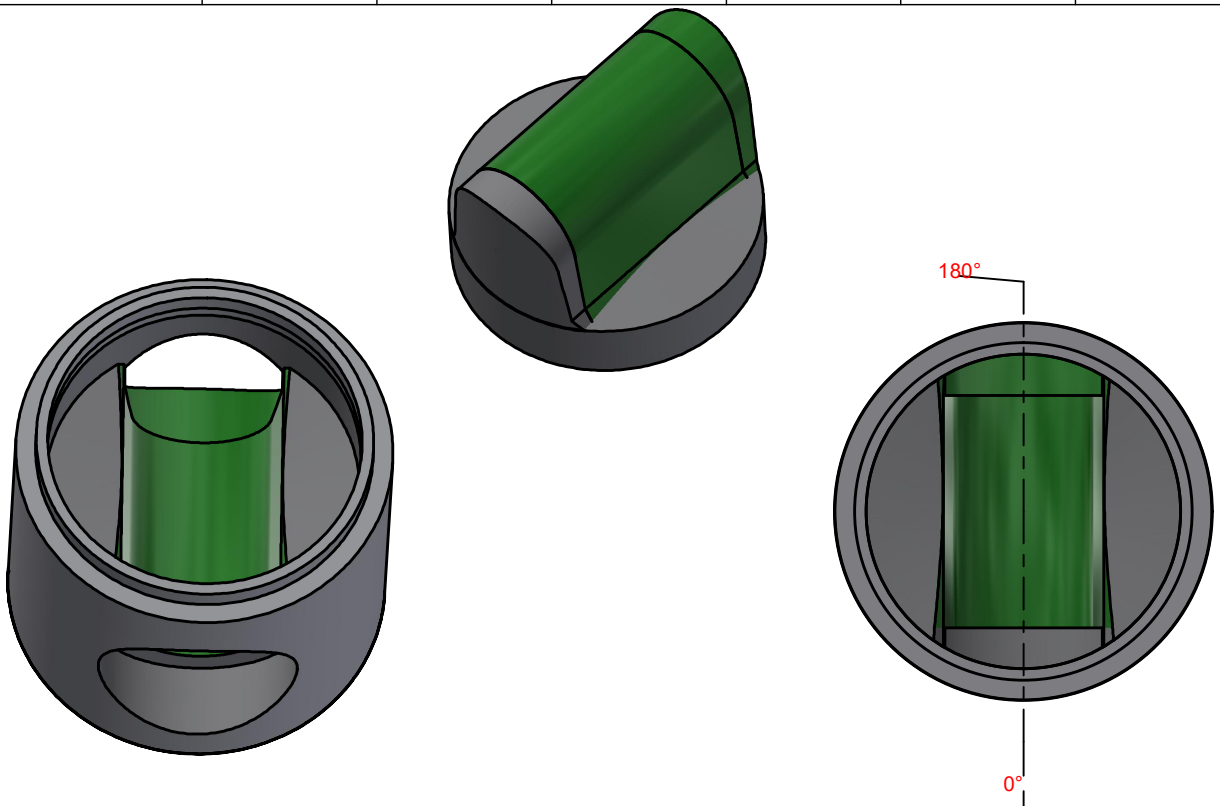
| | Main Inlet > | 1 | | | | |
|---|---|---|---|---|---|---|
| Outlet/Inlet | Outlet | Inlet 1 | Inlet 2 | Inlet 3 | Inlet 4 | Inlet 5 |
| Angle 360° | 0 | 180 | | | | |
| Invert Level mm. | 0 | 30 | | | | |
| Connections type | 675-27" Concrete | 675-27" Concrete | | | | |