Hawkeye Pedershaab
Concrete Technologies Worldwide ™

M CON
PIPE & PRODUCTS INC

2691 Greenfield Road
Ayr, ON N0B 1E0 Canada

Smartcast Basesection Designer. Order/Offer

Customer	TRISAN CONSTRUCTION
Delivery address	BASEMENT FLOODING PROTECTION PROGRAM PHASE 4 ASSIGNMENTS 41-03 & 41-06
Project No.	
EPS Ø x H	1220 / 1018

Order no.	25694_BP02_A
Date.	17-11-2025
Order Date	17-11-2025
Made by	mcon@mcon.com

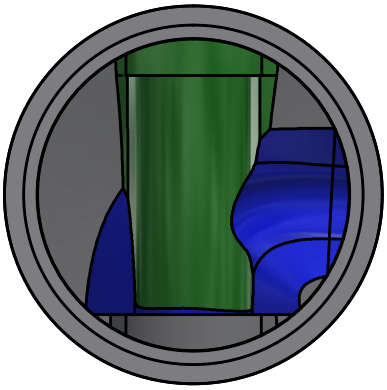

Mould	1220x127x1372 4,5'
Basesection	1220x127x1372 4,5'
Height mm	1480
Bottom inserts mm	152
Benching Height mm	456
Benching Slope 0/00	125
Weight kg	3136 kg

	Main Inlet >		1			
Outlet/Inlet	Outlet	Inlet 1	Inlet 2	Inlet 3	Inlet 4	Inlet 5
Connections type	450-18" Concrete	450-18" Concrete	250-10" PVC SDR 35			
Gasket type	28A PSX-2	28A PSX-2	14M PSX			
Dimension mm.	457	457	251			
Angle 360°	0	180	273			
Invert Level mm.	0	50	530			
2. Invert Level mm.		50	150			
Socket angle 0/00						
Channel Drop mm		50	150			
Straight section mm		50	50			
Note						

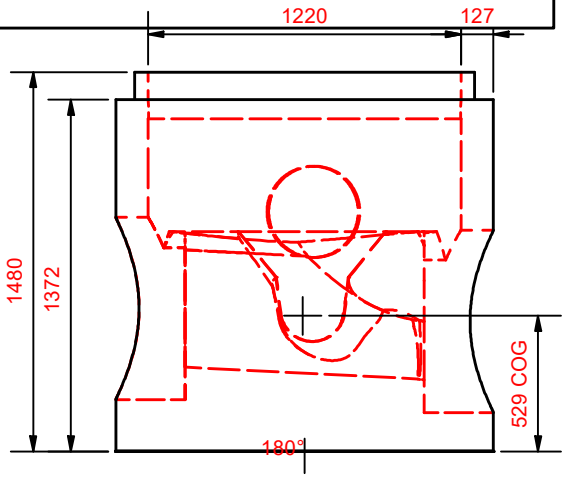

Approved by.	
Control	
Date	

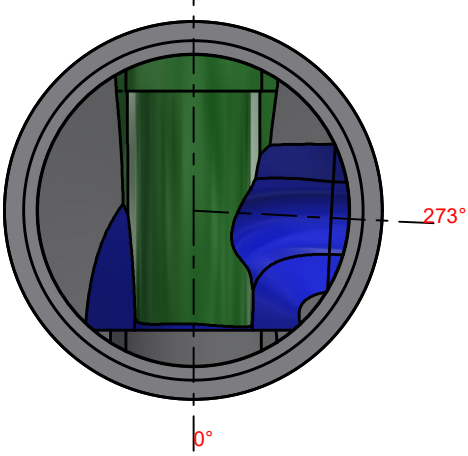

Hawkeye Pedershaab
Concrete Technologies Worldwide ™

M CON
PIPE & PRODUCTS INC

2691 Greenfield Road
Ayr, ON N0B 1E0 Canada

Smartcast Basesection Designer.

Customer	TRISAN CONSTRUCTION
Delivery address	BASEMENT FLOODING PROTECTION PROGRAM PHASE 4 ASSIGNMENTS
Project No.	41-03 & 41-06
Basesection	1220x127x1372 4,5'
Order no.	25694_BP02_A
Order Date	17-11-2025
Weight kg	3136 kg

Center of gravity	529
EPS raw height	1018
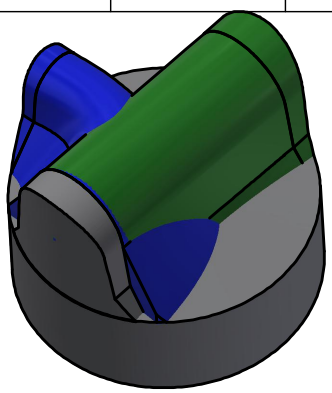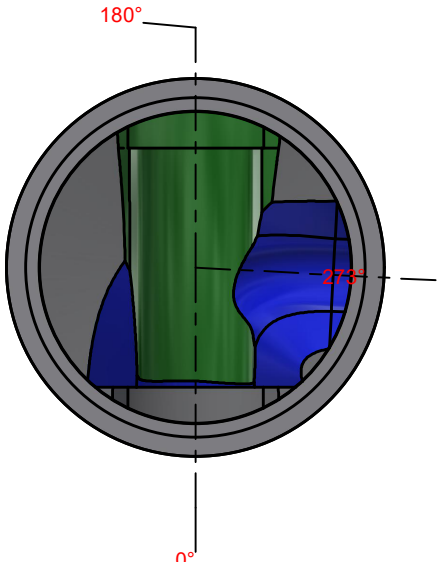
	Main Inlet >		1			
Outlet/Inlet	Outlet	Inlet 1	Inlet 2	Inlet 3	Inlet 4	Inlet 5
Angle 360°	0	180	273			
Invert Level mm.	0	50	530			
Connections type	450-18" Concrete	450-18" Concrete	250-10" PVC SDR 35