Hawkeye Pedershaab
Concrete Technologies Worldwide ™

M CON
PIPE & PRODUCTS INC

2691 Greenfield Road
Ayr, ON N0B 1E0 Canada

Smartcast Basesection Designer. Order/Offer

Customer	TRISAN CONSTRUCTION
Delivery address	BASEMENT FLOODING PROTECTION PROGRAM PHASE 4 ASSIGNMENTS 41-03 & 41-06
Project No.	
EPS Ø x H	1220 / 877,5

Order no.	25694_BP04_A
Date.	17-11-2025
Order Date	17-11-2025
Made by	mcon@mcon.com

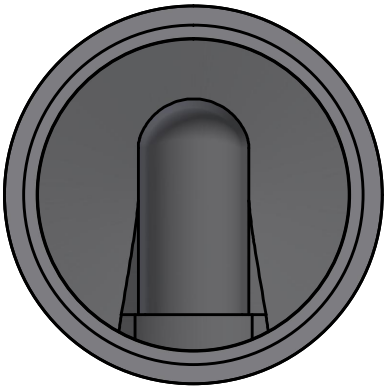

Mould	1220x127x1219 4'
Basesection	1220x127x1219 4'
Height mm	1327
Bottom inserts mm	152
Benching Height mm	381
Benching Slope 0/00	125
Weight kg	3251 kg

	Main Inlet >					
Outlet/Inlet	Outlet	Inlet 1	Inlet 2	Inlet 3	Inlet 4	Inlet 5
Connections type	375-15" Concrete					
Gasket type	24L PSX-2					
Dimension mm.	381					
Angle 360°	0					
Invert Level mm.	0					
2. Invert Level mm.						
Socket angle 0/00						
Channel Drop mm						
Straight section mm						
Note						

Approved by.	
Control	
Date	

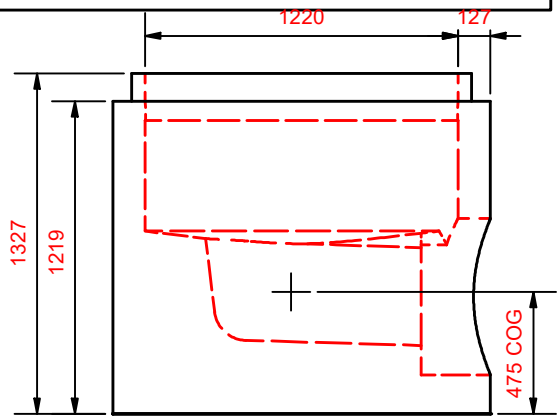

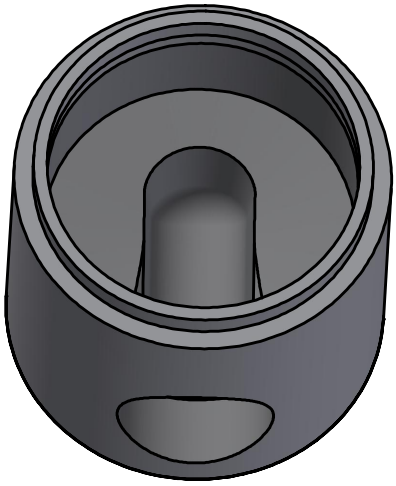

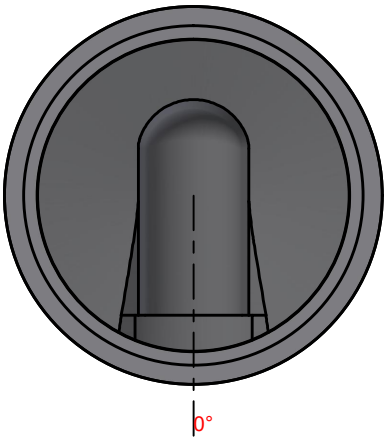

Hawkeye Pedershaab
Concrete Technologies Worldwide ™

M CON
PIPE & PRODUCTS INC

2691 Greenfield Road
Ayr, ON N0B 1E0 Canada

Smartcast Basesection Designer.

Customer	TRISAN CONSTRUCTION
Delivery address	BASEMENT FLOODING PROTECTION PROGRAM PHASE 4 ASSIGNMENTS
Project No.	41-03 & 41-06
Basesection	1220x127x1219 4'
Order no.	25694_BP04_A
Order Date	17-11-2025
Weight kg	3251 kg

Center of gravity	
EPS raw height	877,5
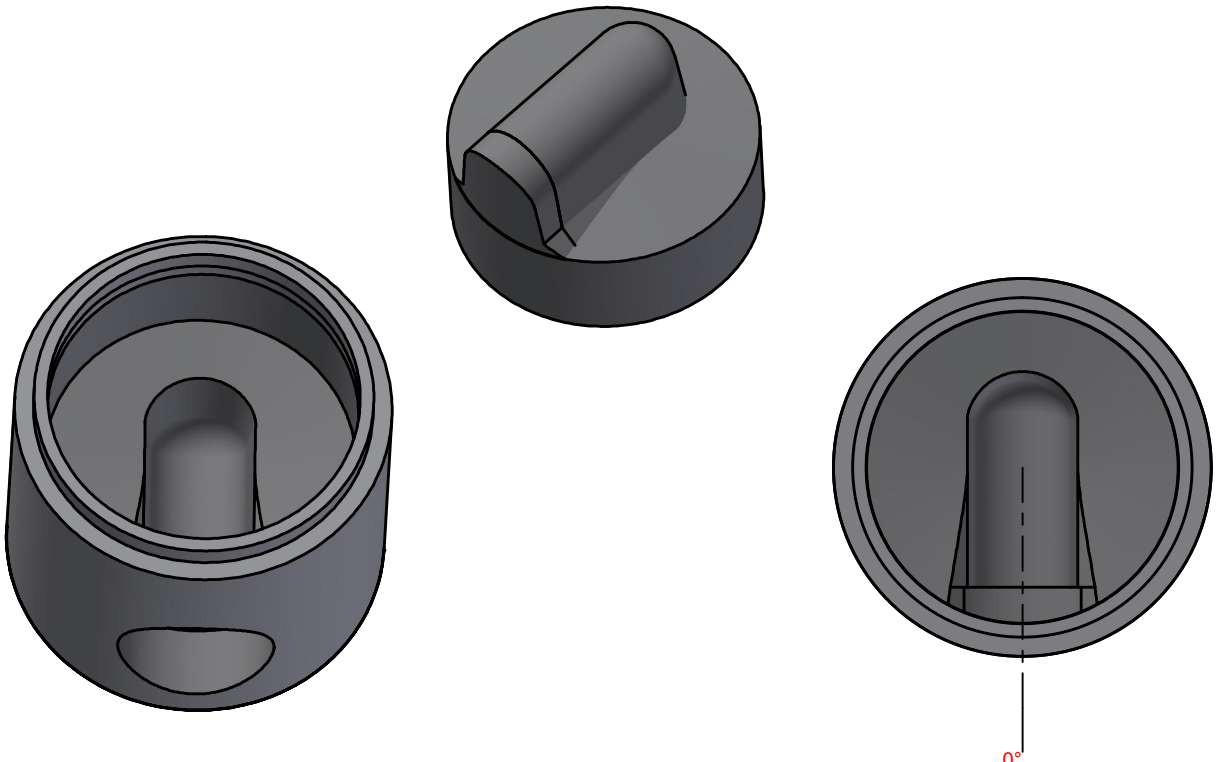
	Main Inlet >					
Outlet/Inlet	Outlet	Inlet 1	Inlet 2	Inlet 3	Inlet 4	Inlet 5
Angle 360°	0					
Invert Level mm.	0					
Connections type	375-15" Concrete