Hawkeye Pedershaab
Concrete Technologies Worldwide ™

M CON
PIPE & PRODUCTS INC

2691 Greenfield Road
Ayr, ON N0B 1E0 Canada

Smartcast Basesection Designer. Order/Offer

Customer	TRISAN CONSTRUCTION
Delivery address	BASEMENT FLOODING PROTECTION PROGRAM PHASE 4 ASSIGNMENTS 41-03 & 41-06
Project No.	
EPS Ø x H	1524 / 1205

Order no.	25694_CR02_A
Date.	14-01-2026
Order Date	14-01-2026
Made by	mcon@mcon.com

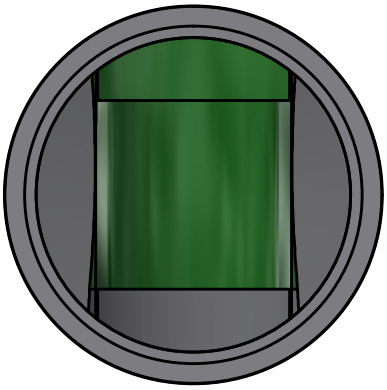

Mould	1524x152x1676 5,5'
Basesection	1524x152x1676 5,5'
Height mm	1797
Bottom inserts mm	229
Benching Height mm	838
Benching Slope 0/00	125
Weight kg	5614 kg

	Main Inlet >	1				
Outlet/Inlet	Outlet	Inlet 1	Inlet 2	Inlet 3	Inlet 4	Inlet 5
Connections type	825-33" Concrete	825-33" Concrete				
Gasket type	S306-46	S306-46				
Dimension mm.	838	838				
Angle 360°	0	180				
Invert Level mm.	0	30				
2. Invert Level mm.		30				
Socket angle 0/00						
Channel Drop mm		30				
Straight section mm		50				
Note						

Approved by.	
Control	
Date	

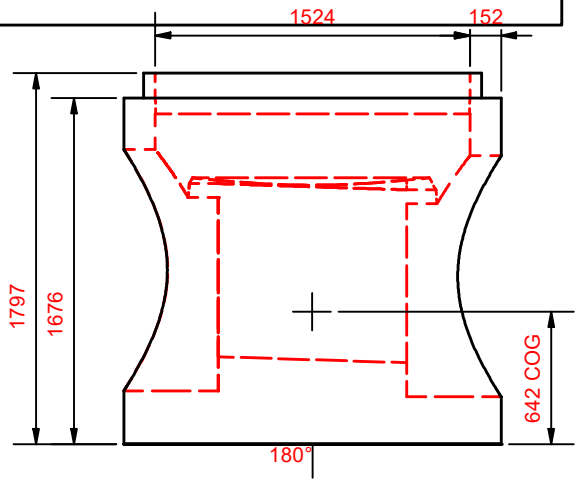

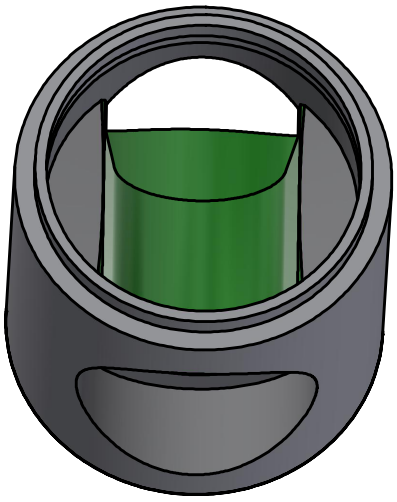

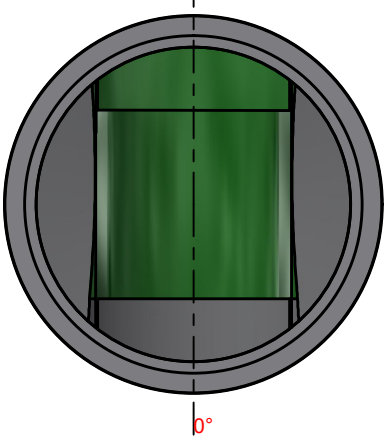

Hawkeye Pedershaab
Concrete Technologies Worldwide ™

M CON
PIPE & PRODUCTS INC

2691 Greenfield Road
Ayr, ON N0B 1E0 Canada

Smartcast Basesection Designer.

Customer	TRISAN CONSTRUCTION
Delivery address	BASEMENT FLOODING PROTECTION PROGRAM PHASE 4 ASSIGNMENTS
Project No.	41-03 & 41-06
Basesection	1524x152x1676 5,5'
Order no.	25694_CR02_A
Order Date	14-01-2026
Weight kg	5614 kg

Center of gravity	642
EPS raw height	1205
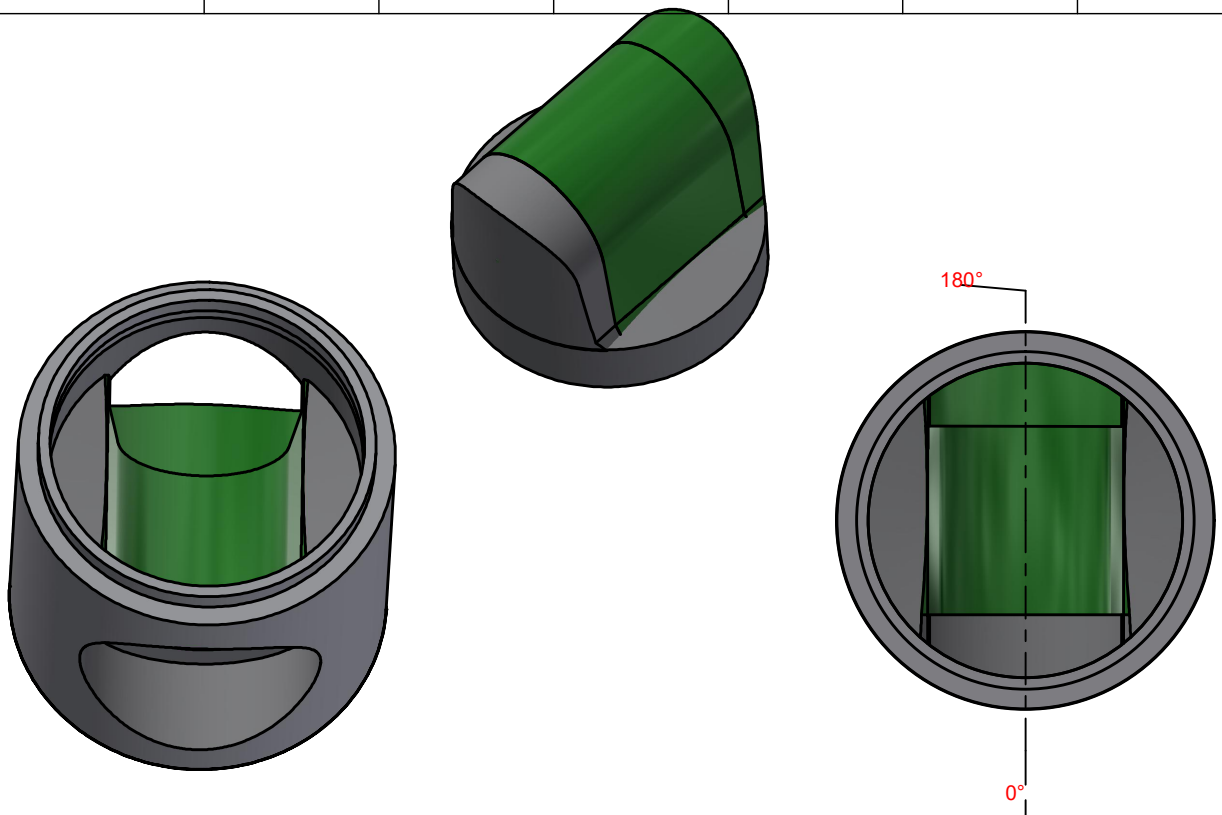
	Main Inlet >	1				
Outlet/Inlet	Outlet	Inlet 1	Inlet 2	Inlet 3	Inlet 4	Inlet 5
Angle 360°	0	180				
Invert Level mm.	0	30				
Connections type	825-33" Concrete	825-33" Concrete