Hawkeye Pedershaab
Concrete Technologies Worldwide ™

M CON
PIPE & PRODUCTS INC

2691 Greenfield Road
Ayr, ON N0B 1E0 Canada

Smartcast Basesection Designer. Order/Offer

Customer	TRISAN CONSTRUCTION
Delivery address	BASEMENT FLOODING PROTECTION PROGRAM PHASE 4 ASSIGNMENTS 41-03 & 41-06
Project No.	
EPS Ø x H	1220 / 852,5

Order no.	25694_GD02_A
Date.	14-01-2026
Order Date	14-01-2026
Made by	mcon@mcon.com

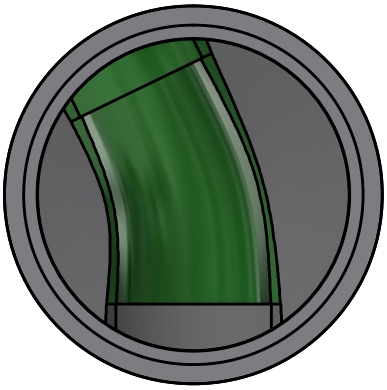

Mould	1220x127x1219 4'
Basesection	1220x127x1219 4'
Height mm	1327
Bottom inserts mm	152
Benching Height mm	533
Benching Slope 0/00	125
Weight kg	3116 kg

	Main Inlet >	1				
Outlet/Inlet	Outlet	Inlet 1	Inlet 2	Inlet 3	Inlet 4	Inlet 5
Connections type	525-21" Concrete	450-18" Concrete				
Gasket type	S306-32	28A PSX-2				
Dimension mm.	533	457				
Angle 360°	0	154				
Invert Level mm.	0	80				
2. Invert Level mm.		80				
Socket angle 0/00						
Channel Drop mm		80				
Straight section mm		50				
Note						

Approved by.	
Control	
Date	

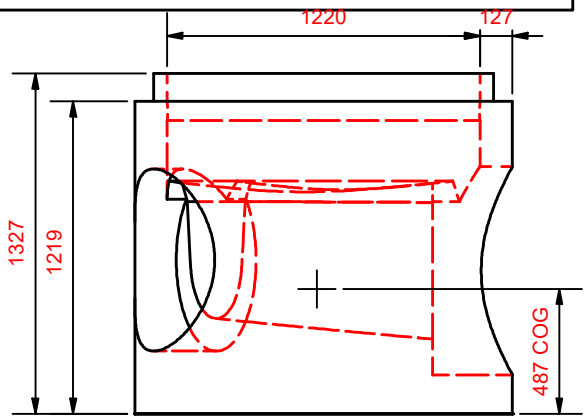

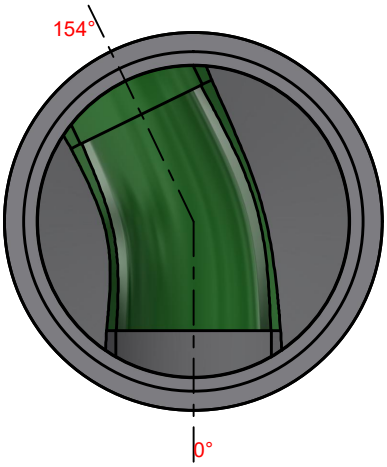

Hawkeye Pedershaab
Concrete Technologies Worldwide ™

M CON
PIPE & PRODUCTS INC

2691 Greenfield Road
Ayr, ON N0B 1E0 Canada

Smartcast Basesection Designer.

Customer	TRISAN CONSTRUCTION
Delivery address	BASEMENT FLOODING PROTECTION PROGRAM PHASE 4 ASSIGNMENTS
Project No.	41-03 & 41-06
Basesection	1220x127x1219 4'
Order no.	25694_GD02_A
Order Date	14-01-2026
Weight kg	3116 kg

Center of gravity	487
EPS raw height	852,5
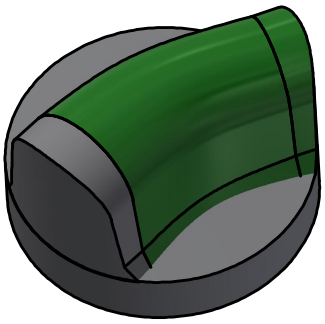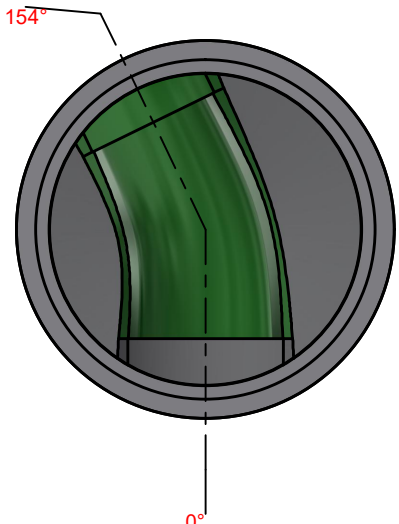
	Main Inlet >	1				
Outlet/Inlet	Outlet	Inlet 1	Inlet 2	Inlet 3	Inlet 4	Inlet 5
Angle 360°	0	154				
Invert Level mm.	0	80				
Connections type	525-21" Concrete	450-18" Concrete