Hawkeye Pedershaab
Concrete Technologies Worldwide ™

M CON
PIPE & PRODUCTS INC

2691 Greenfield Road
Ayr, ON N0B 1E0 Canada

Smartcast Basesection Designer. Order/Offer

Customer	TRISAN CONSTRUCTION
Delivery address	BASEMENT FLOODING PROTECTION PROGRAM PHASE 4 ASSIGNMENTS 41-03 & 41-06
Project No.	
EPS Ø x H	1220 / 540

Order no.	25694_GD06_A
Date.	14-01-2026
Order Date	14-01-2026
Made by	mcon@mcon.com

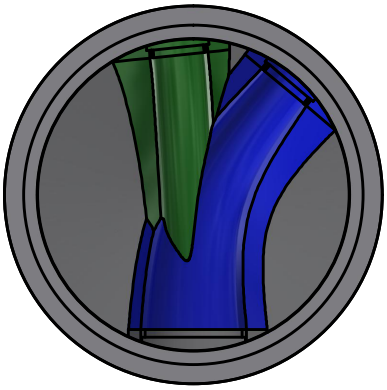

Mould	1220x127x838 2,75'
Basesection	1220x127x838 2,75'
Height mm	946
Bottom inserts mm	152
Benching Height mm	366
Benching Slope 0/00	125
Weight kg	2644 kg

	Main Inlet >		1			
Outlet/Inlet	Outlet	Inlet 1	Inlet 2	Inlet 3	Inlet 4	Inlet 5
Connections type	375-15" PVC SDR 35	200-8" PVC SDR 35	200-8" PVC SDR 35			
Gasket type	20Y PSX	12-08 PSX	12-08 PSX			
Dimension mm.	366	201	201			
Angle 360°	0	174	220			
Invert Level mm.	0	170	170			
2. Invert Level mm.		150	150			
Socket angle 0/00						
Channel Drop mm		150	150			
Straight section mm		50	50			
Note						

Approved by.	
Control	
Date	

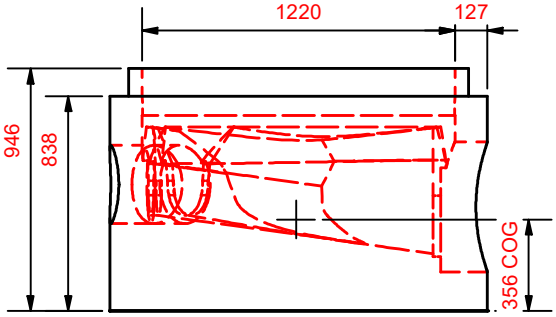

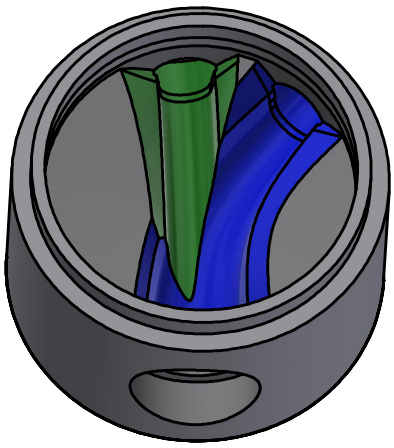

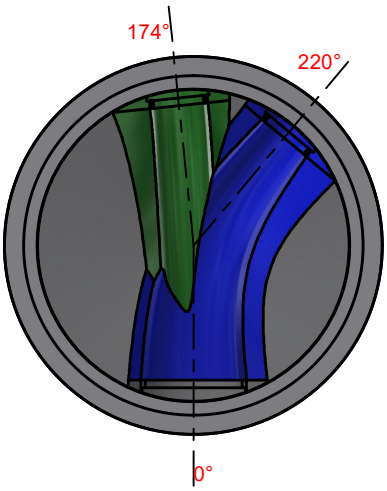

Hawkeye Pedershaab
Concrete Technologies Worldwide ™

M CON
PIPE & PRODUCTS INC

2691 Greenfield Road
Ayr, ON N0B 1E0 Canada

Smartcast Basesection Designer.

Customer	TRISAN CONSTRUCTION
Delivery address	BASEMENT FLOODING PROTECTION PROGRAM PHASE 4 ASSIGNMENTS
Project No.	41-03 & 41-06
Basesection	1220x127x838 2,75'
Order no.	25694_GD06_A
Order Date	14-01-2026
Weight kg	2644 kg

Center of gravity	356
EPS raw height	540
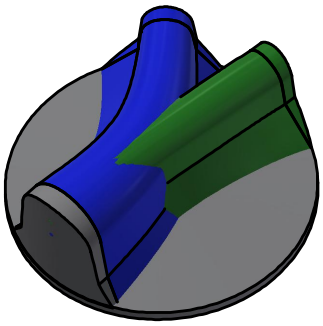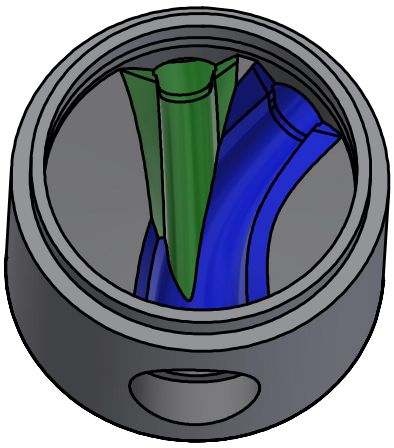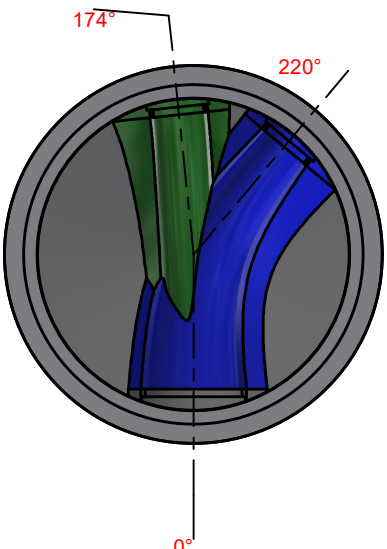
	Main Inlet >		1			
Outlet/Inlet	Outlet	Inlet 1	Inlet 2	Inlet 3	Inlet 4	Inlet 5
Angle 360°	0	174	220			
Invert Level mm.	0	170	170			
Connections type	375-15" PVC SDR 35	200-8" PVC SDR 35	200-8" PVC SDR 35