Hawkeye Pedershaab
Concrete Technologies Worldwide ™

M CON
PIPE & PRODUCTS INC

2691 Greenfield Road
Ayr, ON N0B 1E0 Canada

Smartcast Basesection Designer. Order/Offer

Customer	TRISAN CONSTRUCTION
Delivery address	BASEMENT FLOODING PROTECTION PROGRAM PHASE 4 ASSIGNMENTS 41-03 & 41-06
Project No.	
EPS Ø x H	1524 / 1154,5

Order no.	25694_LG03_A
Date.	23-02-2026
Order Date	23-02-2026
Made by	mcon@mcon.com

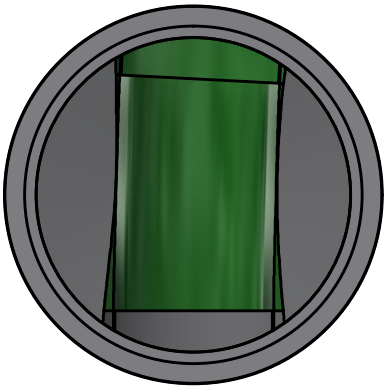

Mould	1524x152x1600 5,25'
Basesection	1524x152x1600 5,25'
Height mm	1721
Bottom inserts mm	229
Benching Height mm	685
Benching Slope 0/00	125
Weight kg	5910 kg

	Main Inlet >	1				
Outlet/Inlet	Outlet	Inlet 1	Inlet 2	Inlet 3	Inlet 4	Inlet 5
Connections type	675-27" Concrete	675-27" Concrete				
Gasket type	S306-38L	S306-38L				
Dimension mm.	686	686				
Angle 360°	0	183				
Invert Level mm.	0	40				
2. Invert Level mm.		40				
Socket angle 0/00						
Channel Drop mm		40				
Straight section mm		50				
Note						

Approved by.	
Control	
Date	

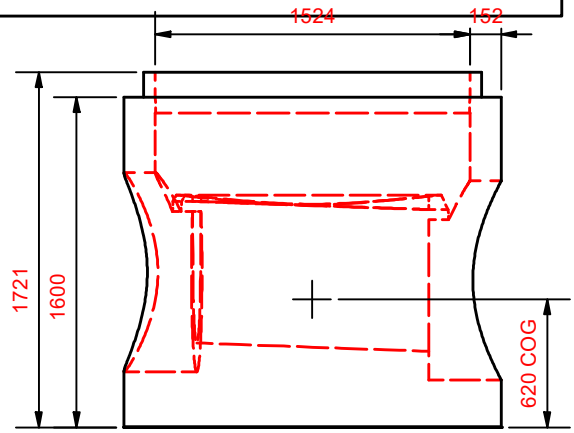

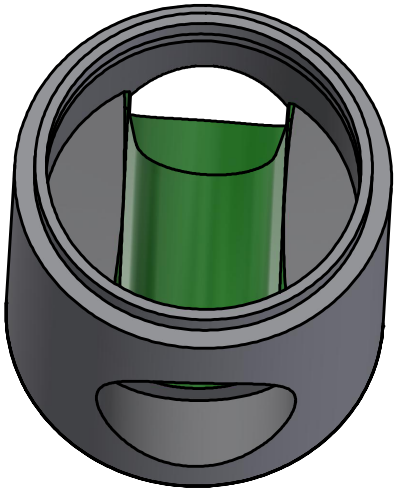

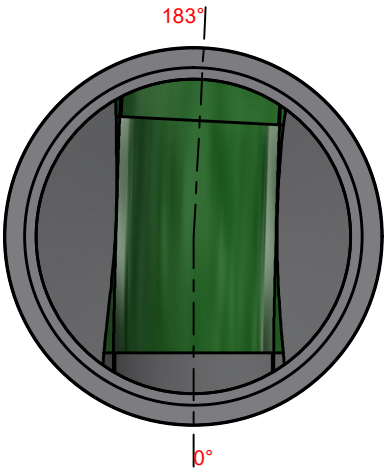

Hawkeye Pedershaab
Concrete Technologies Worldwide ™

M CON
PIPE & PRODUCTS INC

2691 Greenfield Road
Ayr, ON N0B 1E0 Canada

Smartcast Basesection Designer.

Customer	TRISAN CONSTRUCTION
Delivery address	BASEMENT FLOODING PROTECTION PROGRAM PHASE 4 ASSIGNMENTS
Project No.	41-03 & 41-06
Basesection	1524x152x1600 5,25'
Order no.	25694_LG03_A
Order Date	23-02-2026
Weight kg	5910 kg

Center of gravity	620
EPS raw height	1154,5
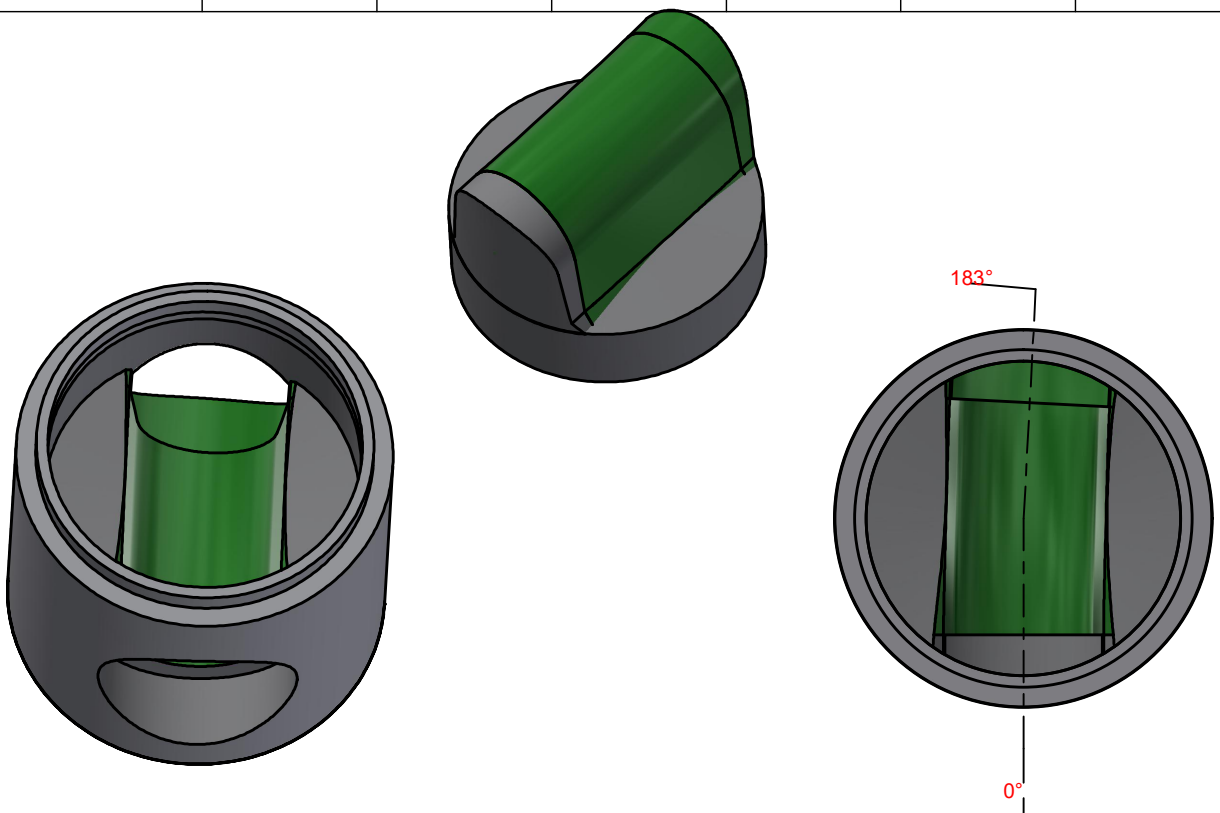
	Main Inlet >	1				
Outlet/Inlet	Outlet	Inlet 1	Inlet 2	Inlet 3	Inlet 4	Inlet 5
Angle 360°	0	183				
Invert Level mm.	0	40				
Connections type	675-27" Concrete	675-27" Concrete