Hawkeye Pedershaab
Concrete Technologies Worldwide ™

M CON
PIPE & PRODUCTS INC

2691 Greenfield Road
Ayr, ON N0B 1E0 Canada

Smartcast Basesection Designer. Order/Offer

Customer	TRISAN CONSTRUCTION
Delivery address	BASEMENT FLOODING PROTECTION PROGRAM PHASE 4 ASSIGNMENTS 41-03 & 41-06
Project No.	
EPS Ø x H	1220 / 852,5

Order no.	25694_RR01_A
Date.	20-01-2026
Order Date	20-01-2026
Made by	mcon@mcon.com

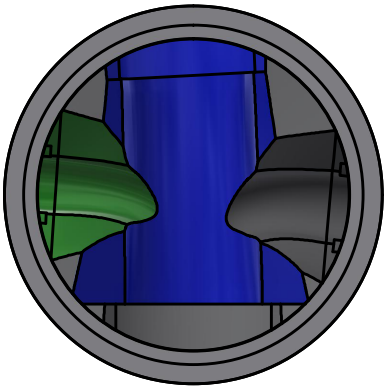

Mould	1220x127x1219 4'
Basesection	1220x127x1219 4'
Height mm	1327
Bottom inserts mm	152
Benching Height mm	533
Benching Slope 0/00	125
Weight kg	2800 kg

	Main Inlet >		1			
Outlet/Inlet	Outlet	Inlet 1	Inlet 2	Inlet 3	Inlet 4	Inlet 5
Connections type	525-21" Concrete	200-8" PVC SDR 35	450-18" Concrete	250-10" PVC SDR 35		
Gasket type	S306-32	12-08 PSX	28A PSX-2	14M PSX		
Dimension mm.	533	201	457	251		
Angle 360°	0	94	177	275		
Invert Level mm.	0	325	80	275		
2. Invert Level mm.		150	80	150		
Socket angle 0/00						
Channel Drop mm		150	80	150		
Straight section mm		50	50	50		
Note						

Approved by.	
Control	
Date	

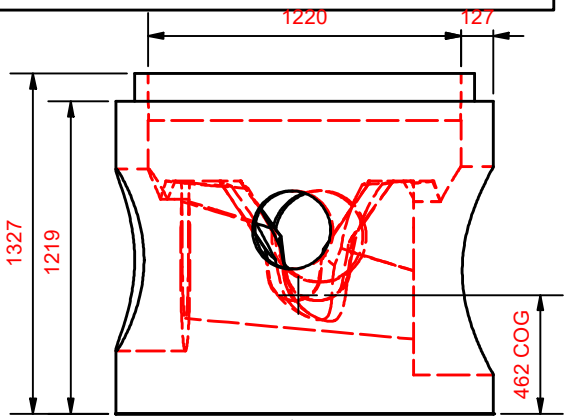

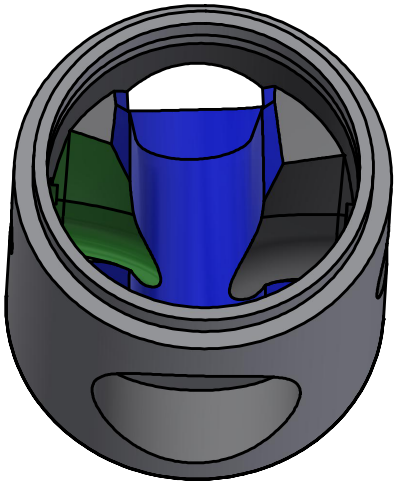

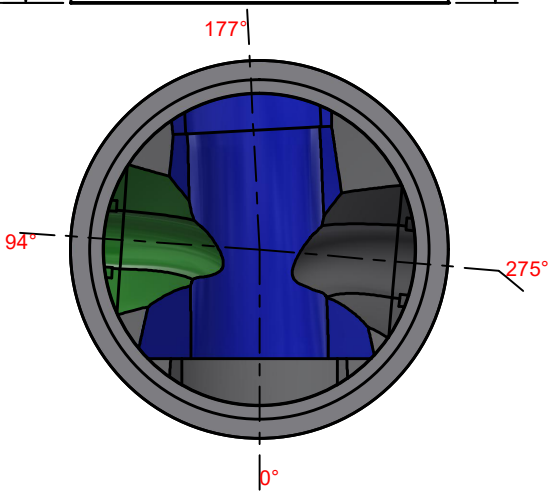

Hawkeye Pedershaab
Concrete Technologies Worldwide ™

M CON
PIPE & PRODUCTS INC

2691 Greenfield Road
Ayr, ON N0B 1E0 Canada

Smartcast Basesection Designer.

Customer	TRISAN CONSTRUCTION
Delivery address	BASEMENT FLOODING PROTECTION PROGRAM PHASE 4 ASSIGNMENTS
Project No.	41-03 & 41-06
Basesection	1220x127x1219 4'
Order no.	25694_RR01_A
Order Date	20-01-2026
Weight kg	2800 kg

Center of gravity	462
EPS raw height	852,5
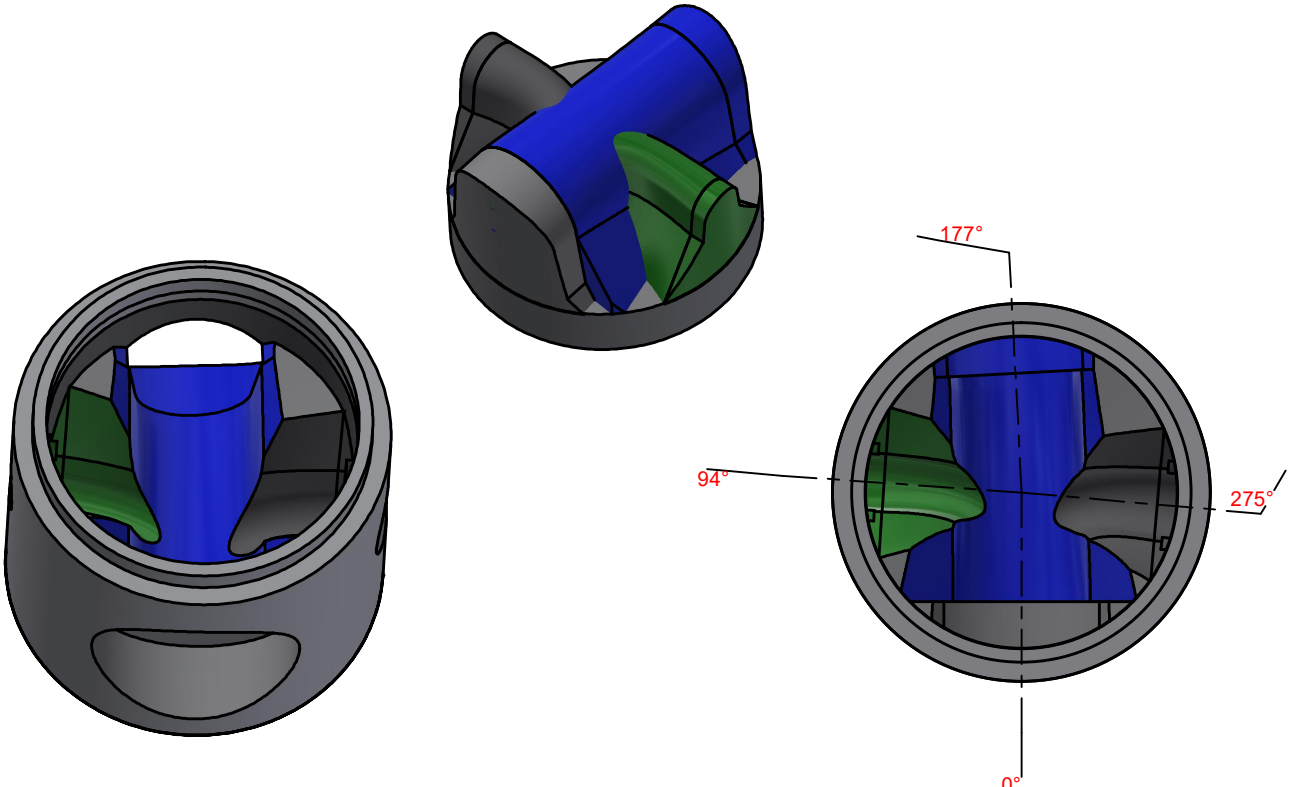
	Main Inlet >		1			
Outlet/Inlet	Outlet	Inlet 1	Inlet 2	Inlet 3	Inlet 4	Inlet 5
Angle 360°	0	94	177	275		
Invert Level mm.	0	325	80	275		
Connections type	525-21" Concrete	200-8" PVC SDR 35	450-18" Concrete	250-10" PVC SDR 35