Hawkeye Pedershaab
Concrete Technologies Worldwide ™

M CON
PIPE & PRODUCTS INC

2691 Greenfield Road
Ayr, ON N0B 1E0 Canada

Smartcast Basesection Designer. Order/Offer

Customer	TRISAN CONSTRUCTION
Delivery address	BASEMENT FLOODING PROTECTION PROGRAM PHASE 4 ASSIGNMENTS 41-03 & 41-06
Project No.	
EPS Ø x H	1524 / 1307,5

Order no.	25694_SR01_A
Date.	22-10-2025
Order Date	22-10-2025
Made by	mcon@mcon.com

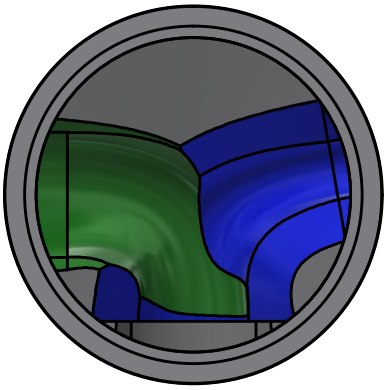

Mould	1524x152x1753 5,75'
Basesection	1524x152x1753 5,75'
Height mm	1874
Bottom inserts mm	229
Benching Height mm	533
Benching Slope 0/00	125
Weight kg	6298 kg

	Main Inlet >		1			
Outlet/Inlet	Outlet	Inlet 1	Inlet 2	Inlet 3	Inlet 4	Inlet 5
Connections type	525-21" Concrete	525-21" Concrete	250-10" PVC SDR 35			
Gasket type	S306-32	S306-32	14M PSX			
Dimension mm.	533	533	251			
Angle 360°	0	90	260			
Invert Level mm.	0	60	730			
2. Invert Level mm.		60	150			
Socket angle 0/00						
Channel Drop mm		60	150			
Straight section mm		50	50			
Note						

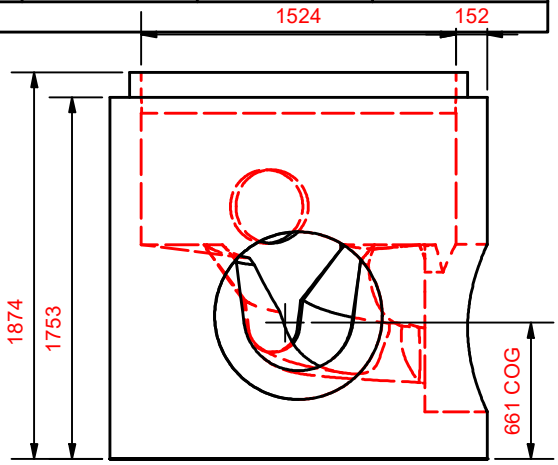

Approved by.	
Control	
Date	

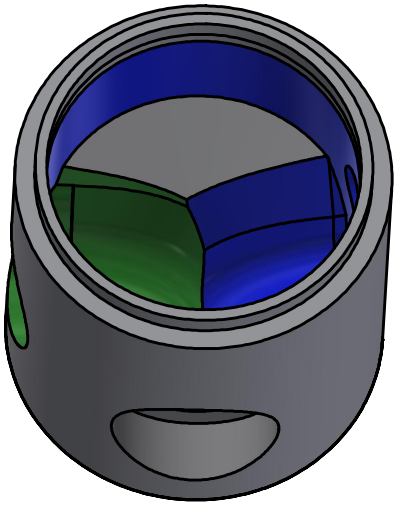

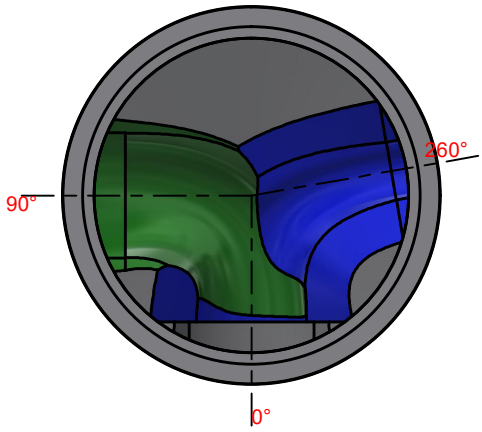

Hawkeye Pedershaab
Concrete Technologies Worldwide ™

M CON
PIPE & PRODUCTS INC

2691 Greenfield Road
Ayr, ON N0B 1E0 Canada

Smartcast Basesection Designer.

Customer	TRISAN CONSTRUCTION
Delivery address	BASEMENT FLOODING PROTECTION PROGRAM PHASE 4 ASSIGNMENTS
Project No.	41-03 & 41-06
Basesection	1524x152x1753 5,75'
Order no.	25694_SR01_A
Order Date	22-10-2025
Weight kg	6298 kg

Center of gravity	661
EPS raw height	1307,5
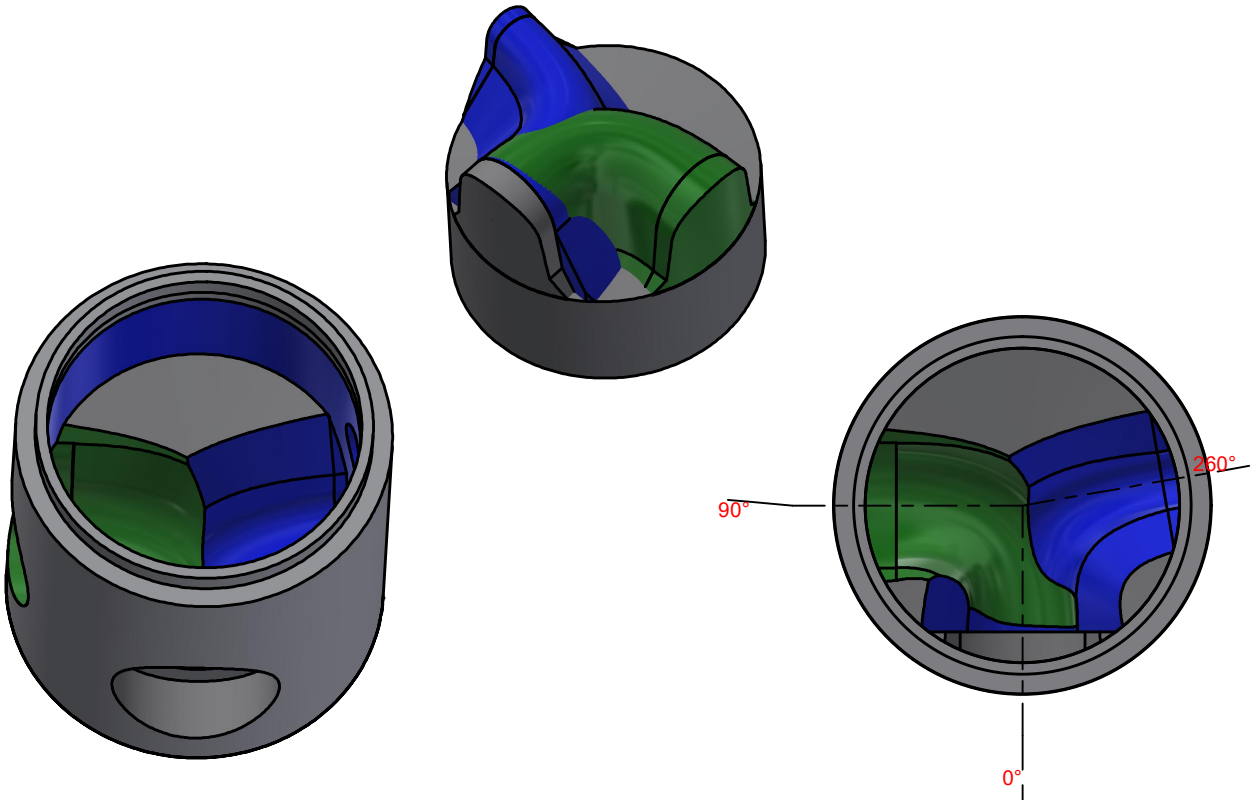
	Main Inlet >		1			
Outlet/Inlet	Outlet	Inlet 1	Inlet 2	Inlet 3	Inlet 4	Inlet 5
Angle 360°	0	90	260			
Invert Level mm.	0	60	730			
Connections type	525-21" Concrete	525-21" Concrete	250-10" PVC SDR 35