Hawkeye Pedershaab
Concrete Technologies Worldwide ™

M CON
PIPE & PRODUCTS INC

2691 Greenfield Road
Ayr, ON N0B 1E0 Canada

Smartcast Basesection Designer. Order/Offer

Customer	
Delivery address	
Project No.	
EPS Ø x H	1524 / 1230,5

Order no.	25694_SR01_A_NEW
Date.	01-12-2025 15:55:59
Order Date	02-12-2025 15:11:51
Made by	dpmcon@afinitas.com

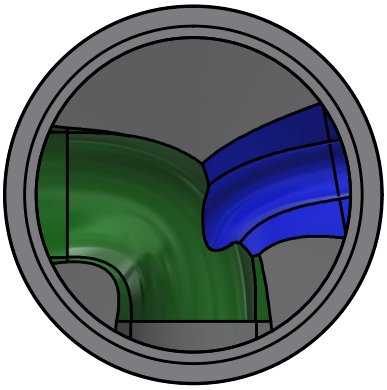

Mould	1524x152x1676 5,5'
Basesection	1524x152x1676 5,5'
Height mm	1797
Bottom inserts mm	229
Benching Height mm	533
Benching Slope 0/00	125
Weight kg	6155 kg

	Main Inlet >	1				
Outlet/Inlet	Outlet	Inlet 1	Inlet 2	Inlet 3	Inlet 4	Inlet 5
Connections type	525-21" Concrete	525-21" Concrete	250-10" PVC SDR 35			
Gasket type	S306-32	S306-32	14M PSX			
Dimension mm.	533	533	251			
Angle 360°	0	90	260			
Invert Level mm.	0	60	400			
2. Invert Level mm.		60	150			
Socket angle 0/00						
Channel Drop mm		60	150			
Straight section mm		50	50			
Note						

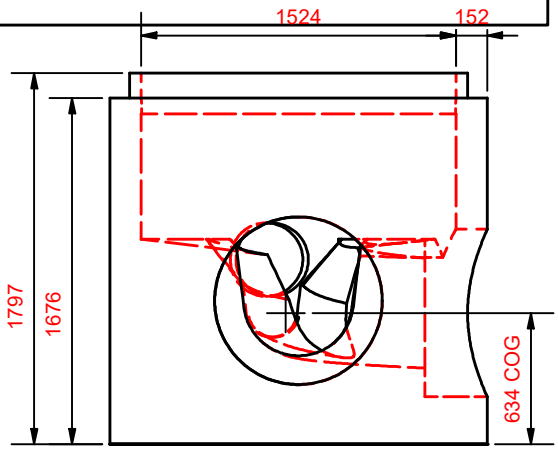

Approved by.	
Control	
Date	

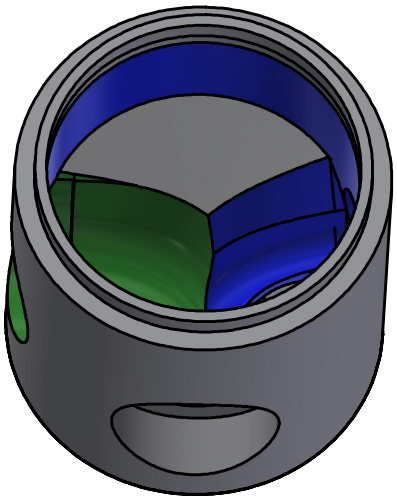

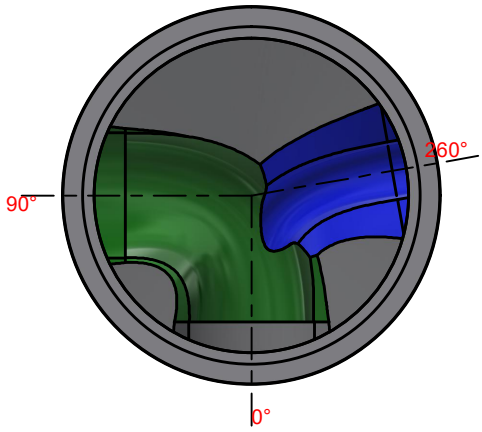

Hawkeye Pedershaab
Concrete Technologies Worldwide ™

M CON
PIPE & PRODUCTS INC

2691 Greenfield Road
Ayr, ON N0B 1E0 Canada

Smartcast Basesection Designer.

Customer	
Delivery address	
Project No.	
Basesection	**1524x152x1676 5,5'**
Order no.	**25694_SR01_A_NEW**
Order Date	**02-12-2025 15:11:51**
Weight kg	**6155 kg**

Center of gravity	634
EPS raw height	1230,5
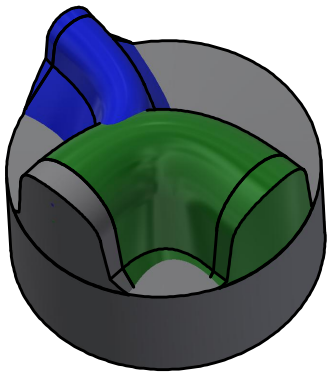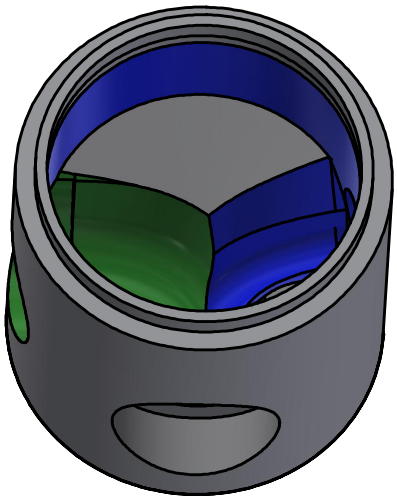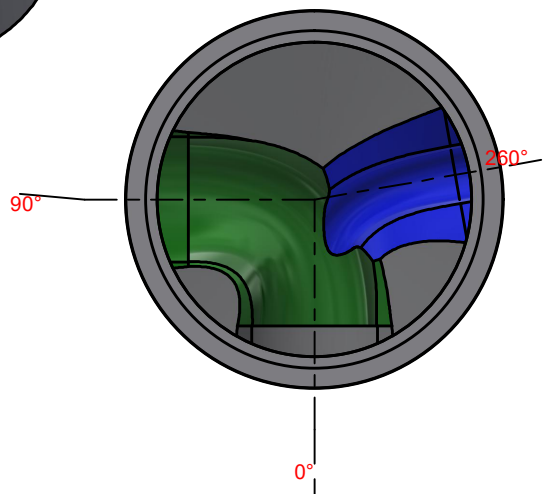
	Main Inlet >	1				
Outlet/Inlet	Outlet	Inlet 1	Inlet 2	Inlet 3	Inlet 4	Inlet 5
Angle 360°	0	90	260			
Invert Level mm.	0	60	400			
Connections type	525-21" Concrete	525-21" Concrete	250-10" PVC SDR 35