Hawkeye Pedershaab
Concrete Technologies Worldwide ™

M CON
PIPE & PRODUCTS INC

2691 Greenfield Road
Ayr, ON N0B 1E0 Canada

Smartcast Basesection Designer. Order/Offer

Customer	TRISAN CONSTRUCTION
Delivery address	BASEMENT FLOODING PROTECTION PROGRAM PHASE 4 ASSIGNMENTS 41-03 & 41-06
Project No.	
EPS Ø x H	1524 / 708,5

Order no.	25694_WD02A_A
Date.	20-01-2026
Order Date	20-01-2026
Made by	mcon@mcon.com

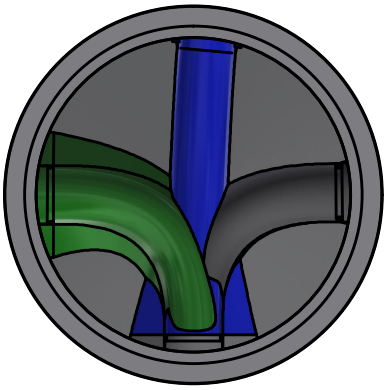

Mould	1524x152x1067 3,5'
Basesection	1524x152x1067 3,5'
Height mm	1188
Bottom inserts mm	229
Benching Height mm	251
Benching Slope 0/00	125
Weight kg	4491 kg

	Main Inlet >		1			
Outlet/Inlet	Outlet	Inlet 1	Inlet 2	Inlet 3	Inlet 4	Inlet 5
Connections type	250-10" PVC SDR 35	250-10" PVC SDR 35	250-10" PVC SDR 35	250-10" PVC SDR 35		
Gasket type	14M PSX	14M PSX	14M PSX	14M PSX		
Dimension mm.	251	251	251	251		
Angle 360°	0	90	185	269		
Invert Level mm.	0	5	340	170		
2. Invert Level mm.		5	150	150		
Socket angle 0/00						
Channel Drop mm		5	150	150		
Straight section mm		50	50	50		
Note						

Approved by.	
Control	
Date	

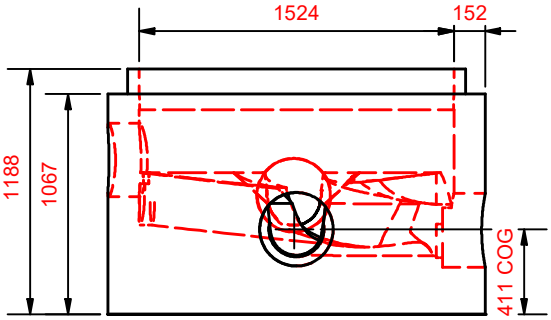

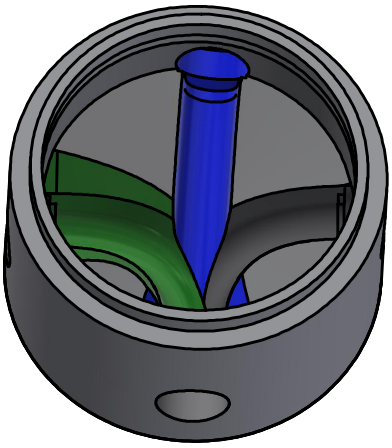

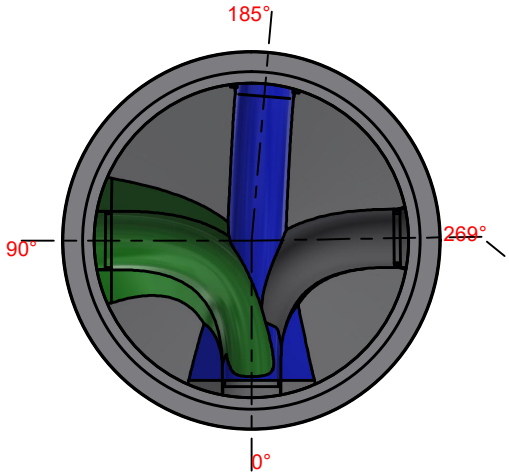

Hawkeye Pedershaab
Concrete Technologies Worldwide

M CON
PIPE & PRODUCTS INC

2691 Greenfield Road
Ayr, ON N0B 1E0 Canada

Smartcast Basesection Designer.

Customer	TRISAN CONSTRUCTION
Delivery address	BASEMENT FLOODING PROTECTION PROGRAM PHASE 4 ASSIGNMENTS
Project No.	41-03 & 41-06
Basesection	1524x152x1067 3,5'
Order no.	25694_WD02A_A
Order Date	20-01-2026
Weight kg	4491 kg

Center of gravity	411
EPS raw height	708,5
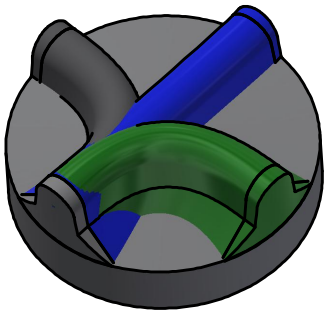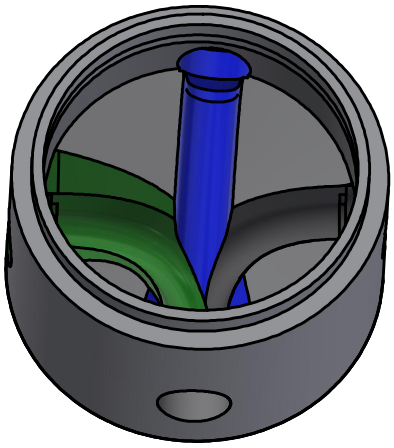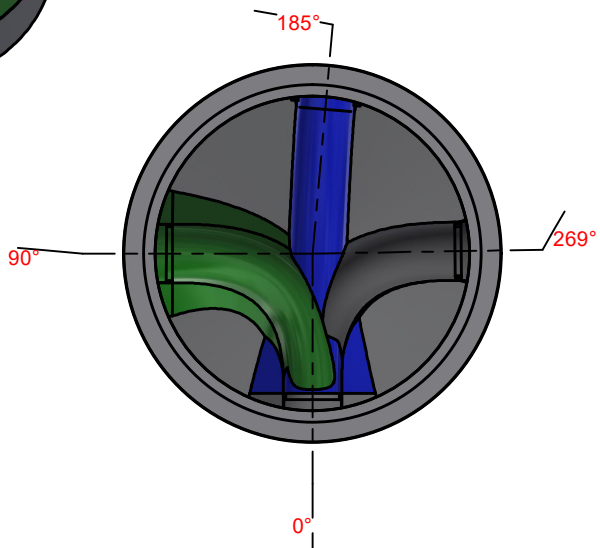
	Main Inlet >		1			
Outlet/Inlet	Outlet	Inlet 1	Inlet 2	Inlet 3	Inlet 4	Inlet 5
Angle 360°	0	90	185	269		
Invert Level mm.	0	5	340	170		
Connections type	250-10" PVC SDR 35	250-10" PVC SDR 35	250-10" PVC SDR 35	250-10" PVC SDR 35