Hawkeye Pedershaab
Concrete Technologies Worldwide ™

M CON
PIPE & PRODUCTS INC

2691 Greenfield Road
Ayr, ON N0B 1E0 Canada

Smartcast Basesection Designer. Order/Offer

Customer	TRISAN CONSTRUCTION
Delivery address	BASEMENT FLOODING PROTECTION PROGRAM
Project No.	PHASE 4 ASSIGNMENTS 41-03 & 41-06
EPS Ø x H	1524 632,5

Order no.	25694_WD05A_A
Date.	20-01-2026
Order Date	20-01-2026
Made by	mcon@mcon.com

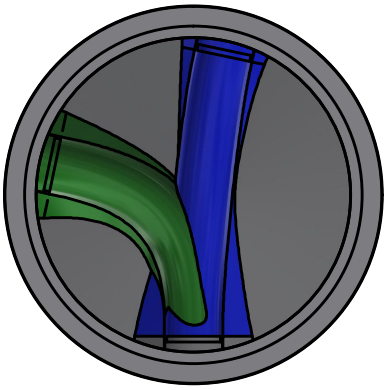

Mould	1524x152x991 3,25'
Basesection	1524x152x991 3,25'
Height mm	1112
Bottom inserts mm	229
Benching Height mm	251
Benching Slope 0/00	125
Weight kg	4356 kg

	Main Inlet >		1			
Outlet/Inlet	Outlet	Inlet 1	Inlet 2	Inlet 3	Inlet 4	Inlet 5
Connections type	250-10" PVC SDR 35	250-10" PVC SDR 35	250-10" PVC SDR 35			
Gasket type	14M PSX	14M PSX	14M PSX			
Dimension mm.	251	251	251			
Angle 360°	0	102	192			
Invert Level mm.	0	30	80			
2. Invert Level mm.		30	80			
Socket angle 0/00						
Channel Drop mm		30	80			
Straight section mm		50	50			
Note						

Approved by.	
Control	
Date	

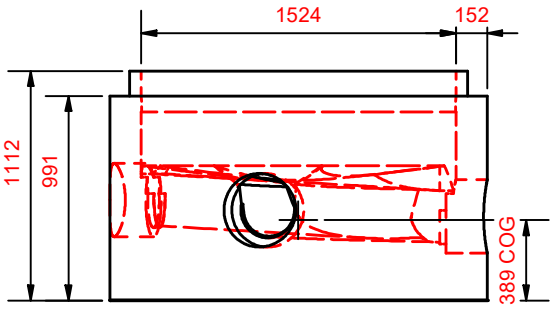

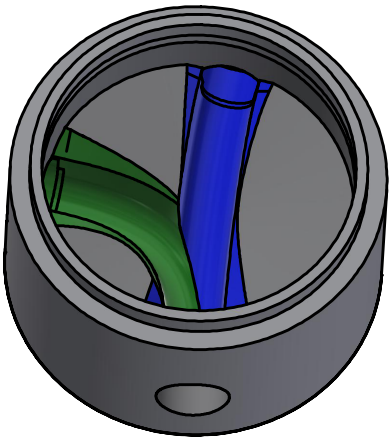

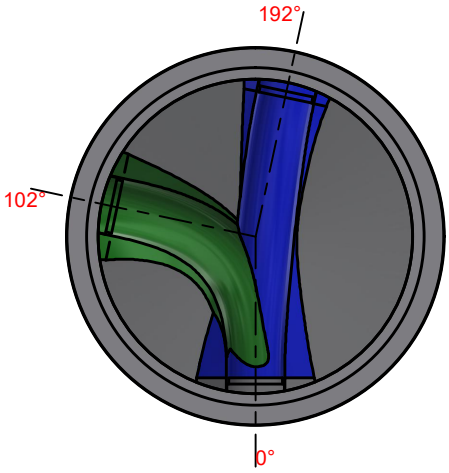

Hawkeye Pedershaab
Concrete Technologies Worldwide ™

M CON
PIPE & PRODUCTS INC

2691 Greenfield Road
Ayr, ON N0B 1E0 Canada

Smartcast Basesection Designer.

Customer	TRISAN CONSTRUCTION
Delivery address	BASEMENT FLOODING PROTECTION PROGRAM PHASE 4 ASSIGNMENTS
Project No.	41-03 & 41-06
Basesection	1524x152x991 3,25'
Order no.	25694_WD05A_A
Order Date	20-01-2026
Weight kg	4356 kg

Center of gravity	389
EPS raw height	632,5
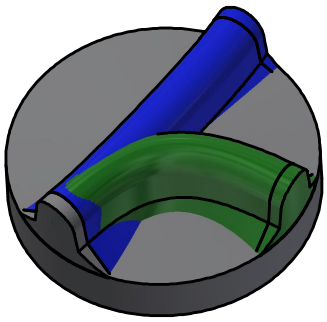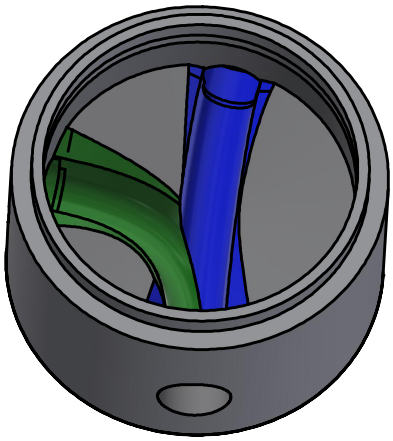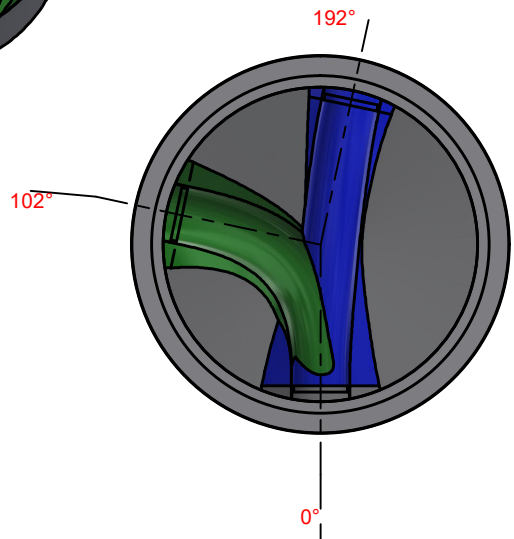
	Main Inlet >		1			
Outlet/Inlet	Outlet	Inlet 1	Inlet 2	Inlet 3	Inlet 4	Inlet 5
Angle 360°	0	102	192			
Invert Level mm.	0	30	80			
Connections type	250-10" PVC SDR 35	250-10" PVC SDR 35	250-10" PVC SDR 35