Hawkeye Pedershaab
Concrete Technologies Worldwide ™

M CON
PIPE & PRODUCTS INC

2691 Greenfield Road
Ayr, ON N0B 1E0 Canada

Smartcast Basesection Designer. Order/Offer

Customer	TRISAN CONSTRUCTION
Delivery address	
Project No.	WEST TRUNK SANITARY SEWER UPGRADES
EPS Ø x H	1524 / 1205

Order no.	25716_MHCF01_A
Date.	28-08-2025
Order Date	28-08-2025
Made by	mcon@mcon.com

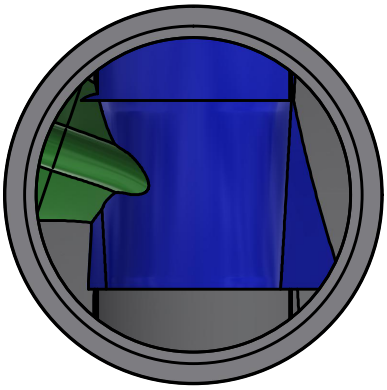

Mould	1524x152x1676 5,5'
Basesection	1524x152x1676 5,5'
Height mm	1797
Bottom inserts mm	229
Benching Height mm	838
Benching Slope 0/00	125
Weight kg	5355 kg

	Main Inlet >		1			
Outlet/Inlet	Outlet	Inlet 1	Inlet 2	Inlet 3	Inlet 4	Inlet 5
Connections type	825-33" Concrete	200-8" PVC SDR 35	825-33" Concrete			
Gasket type	S306-46	12-08 PSX	S306-46			
Dimension mm.	838	201	838			
Angle 360°	0	109	180			
Invert Level mm.	0	620	30			
2. Invert Level mm.		150	30			
Socket angle 0/00						
Channel Drop mm		150	30			
Straight section mm		50	50			
Note						

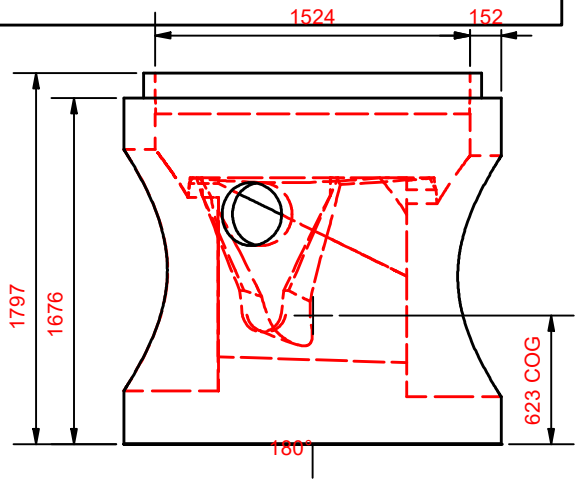

Approved by.	
Control	
Date	

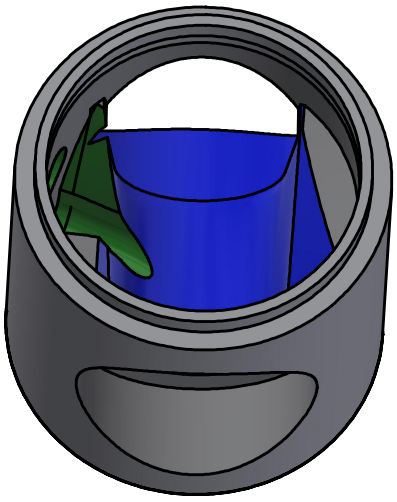

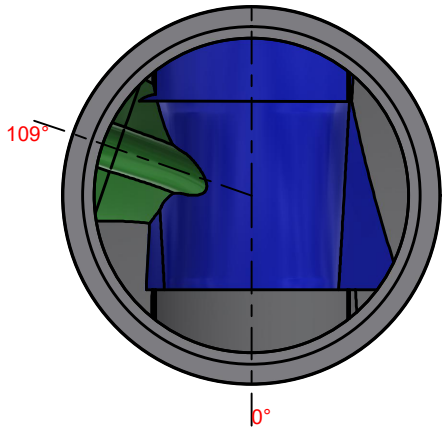

Hawkeye Pedershaab
Concrete Technologies Worldwide ™

M CON
PIPE & PRODUCTS INC

2691 Greenfield Road
Ayr, ON N0B 1E0 Canada

Smartcast Basesection Designer.

Customer	**TRISAN CONSTRUCTION**
Delivery address	
Project No.	**WEST TRUNK SANITARY SEWER UPGRADES**
Basesection	**1524x152x1676 5,5'**
Order no.	**25716_MHCF01_A**
Order Date	**28-08-2025**
Weight kg	**5355 kg**

Center of gravity	623
EPS raw height	1205
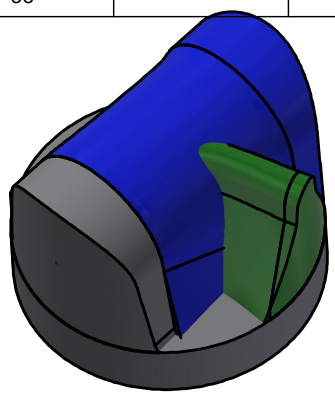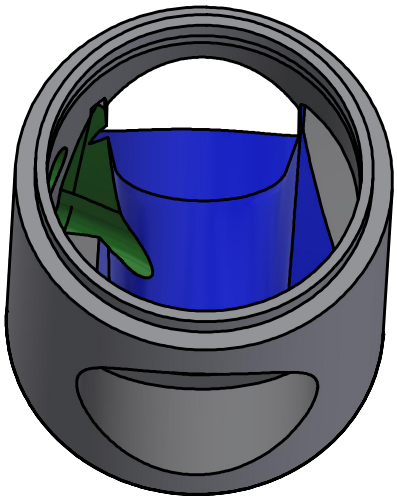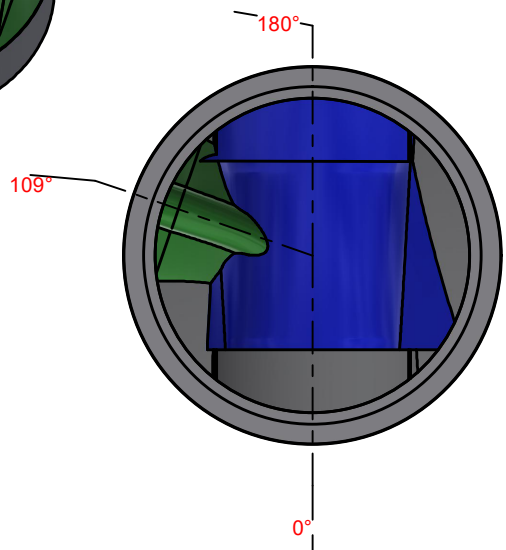
	Main Inlet >		1			
Outlet/Inlet	Outlet	Inlet 1	Inlet 2	Inlet 3	Inlet 4	Inlet 5
Angle 360°	0	109	180			
Invert Level mm.	0	620	30			
Connections type	825-33" Concrete	200-8" PVC SDR 35	825-33" Concrete