Hawkeye Pedershaab
Concrete Technologies Worldwide ™

M CON
PIPE & PRODUCTS INC

2691 Greenfield Road
Ayr, ON N0B 1E0 Canada

Smartcast Basesection Designer. Order/Offer

Customer	TRISAN CONSTRUCTION
Delivery address	
Project No.	WEST TRUNK SANITARY SEWER UPGRADES
EPS Ø x H	1524 / 1282

Order no.	25716_MHCR06_A
Date.	05-09-2025
Order Date	05-09-2025
Made by	mcon@mcon.com

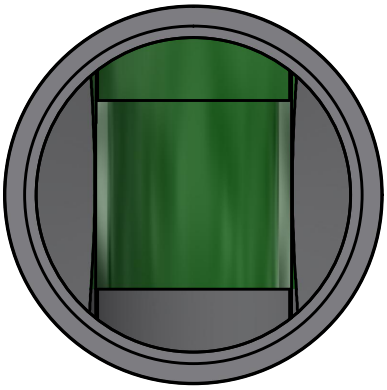

Mould	1524x152x1753 5,75'
Basesection	1524x152x1753 5,75'
Height mm	1874
Bottom inserts mm	229
Benching Height mm	838
Benching Slope 0/00	125
Weight kg	5723 kg

	Main Inlet >	1				
Outlet/Inlet	Outlet	Inlet 1	Inlet 2	Inlet 3	Inlet 4	Inlet 5
Connections type	825-33" Concrete	825-33" Concrete				
Gasket type	S306-46	S306-46				
Dimension mm.	838	838				
Angle 360°	0	180				
Invert Level mm.	0	10				
2. Invert Level mm.		10				
Socket angle 0/00						
Channel Drop mm		10				
Straight section mm		50				
Note						

Approved by.	
Control	
Date	

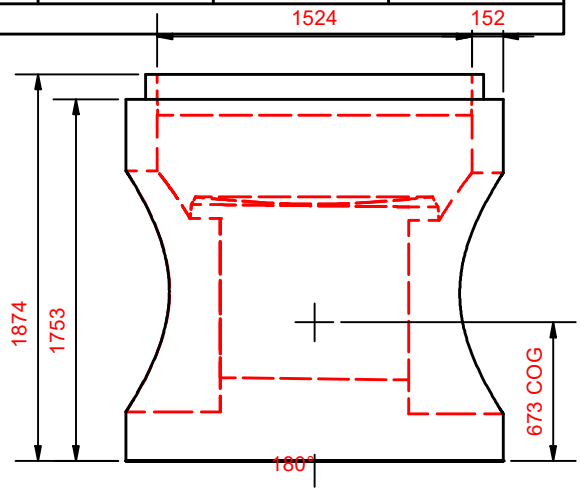

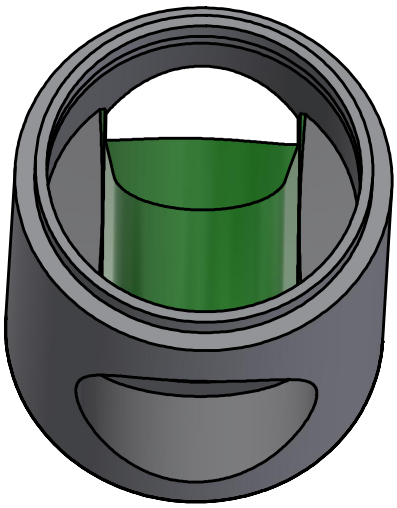

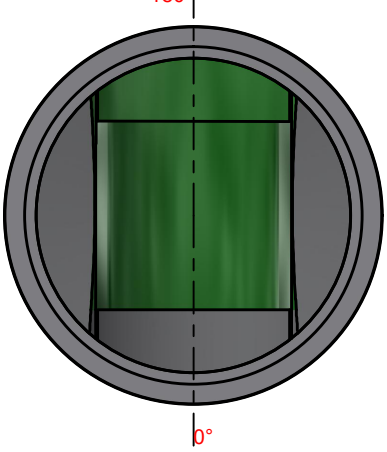

Hawkeye Pedershaab
Concrete Technologies Worldwide ™

M CON
PIPE & PRODUCTS INC

2691 Greenfield Road
Ayr, ON N0B 1E0 Canada

Smartcast Basesection Designer.

Customer	**TRISAN CONSTRUCTION**
Delivery address	
Project No.	**WEST TRUNK SANITARY SEWER UPGRADES**
Basesection	**1524x152x1753 5,75'**
Order no.	**25716_MHCR06_A**
Order Date	**05-09-2025**
Weight kg	**5723 kg**

Center of gravity	673
EPS raw height	1282
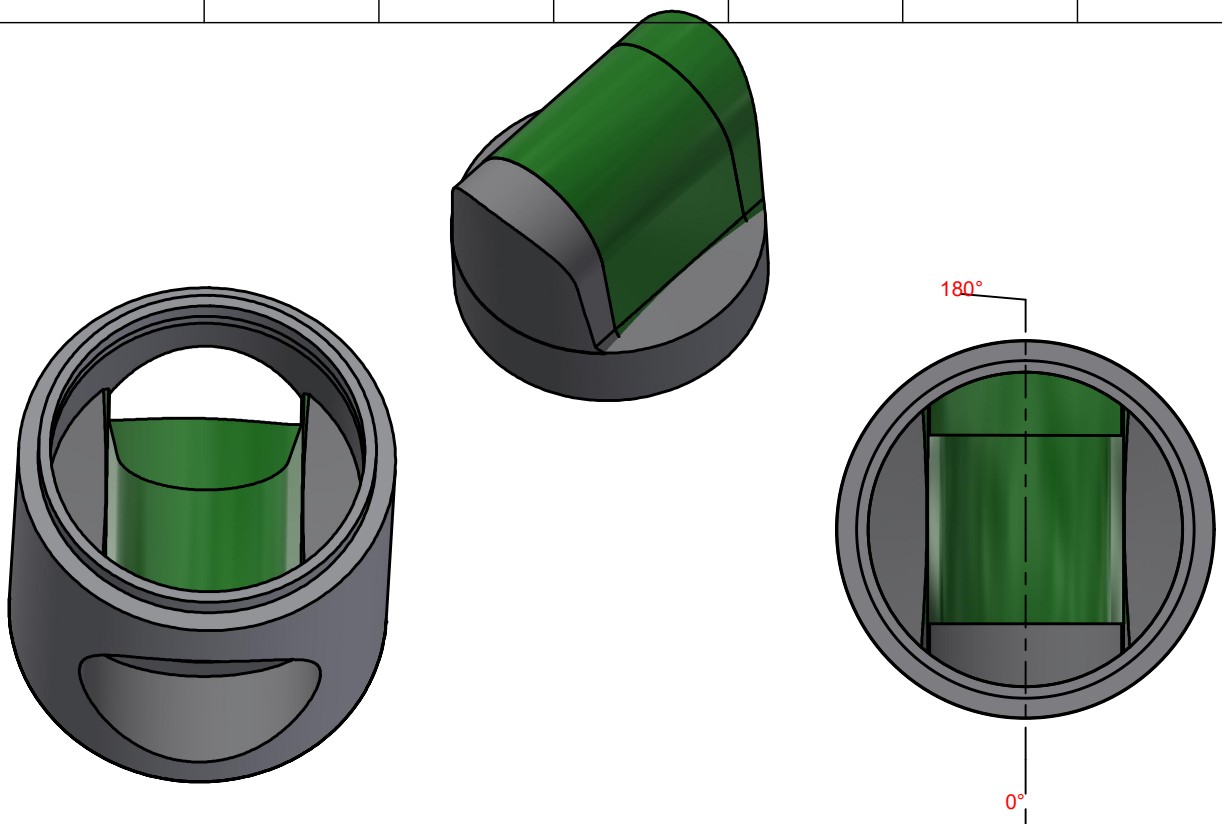
	Main Inlet >	1				
Outlet/Inlet	Outlet	Inlet 1	Inlet 2	Inlet 3	Inlet 4	Inlet 5
Angle 360°	0	180				
Invert Level mm.	0	10				
Connections type	825-33" Concrete	825-33" Concrete