Hawkeye Pedershaab
Concrete Technologies Worldwide ™

M CON
PIPE & PRODUCTS INC

2691 Greenfield Road
Ayr, ON N0B 1E0 Canada

Smartcast Basesection Designer. Order/Offer

Customer	TRISAN CONSTRUCTION
Delivery address	
Project No.	WEST TRUNK SANITARY SEWER UPGRADES
EPS Ø x H	1220 / 1018

Order no.	25716_MHDR06_A
Date.	26-09-2025
Order Date	26-09-2025
Made by	mcon@mcon.com

Mould	1220x127x1372 4,5'
Basesection	1220x127x1372 4,5'
Height mm	1480
Bottom inserts mm	152
Benching Height mm	610
Benching Slope 0/00	125
Weight kg	3037 kg

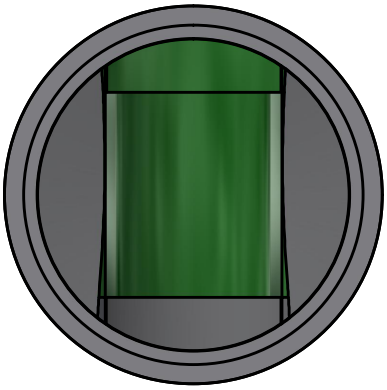

	Main Inlet >	1				
Outlet/Inlet	Outlet	Inlet 1	Inlet 2	Inlet 3	Inlet 4	Inlet 5
Connections type	600-24" Concrete	600-24" Concrete				
Gasket type	S306-34L	S306-34L				
Dimension mm.	610	610				
Angle 360°	0	180				
Invert Level mm.	0	30				
2. Invert Level mm.		30				
Socket angle 0/00						
Channel Drop mm		30				
Straight section mm		50				
Note						

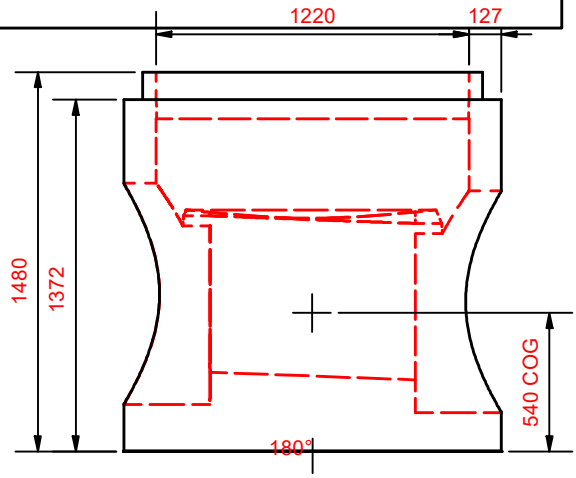

Approved by.	
Control	
Date	

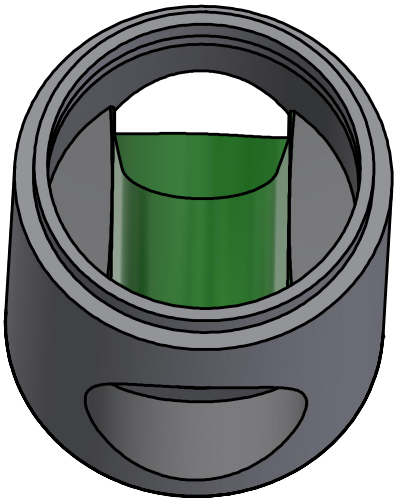

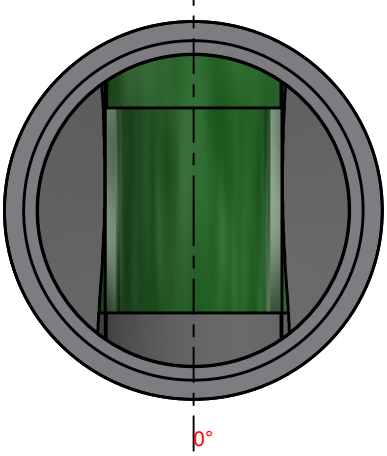

Hawkeye Pedershaab
Concrete Technologies Worldwide ™

M CON
PIPE & PRODUCTS INC

2691 Greenfield Road
Ayr, ON N0B 1E0 Canada

Smartcast Basesection Designer.

Customer	TRISAN CONSTRUCTION
Delivery address	
Project No.	WEST TRUNK SANITARY SEWER UPGRADES
Basesection	1220x127x1372 4,5'
Order no.	25716_MHDR06_A
Order Date	26-09-2025
Weight kg	3037 kg

Center of gravity	540
EPS raw height	1018
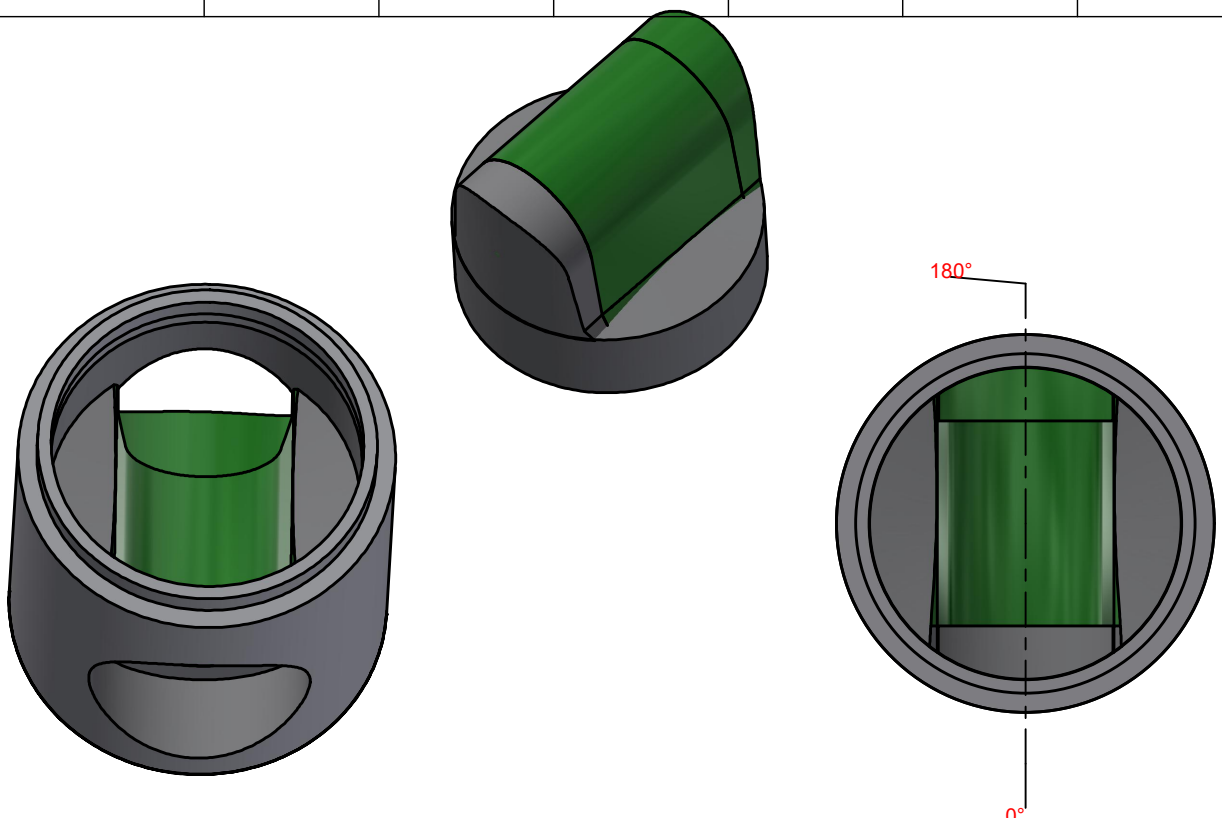
	Main Inlet >	1				
Outlet/Inlet	Outlet	Inlet 1	Inlet 2	Inlet 3	Inlet 4	Inlet 5
Angle 360°	0	180				
Invert Level mm.	0	30				
Connections type	600-24" Concrete	600-24" Concrete