Hawkeye Pedershaab
Concrete Technologies Worldwide ™

M CON
PIPE & PRODUCTS INC

2691 Greenfield Road
Ayr, ON N0B 1E0 Canada

Smartcast Basesection Designer. Order/Offer

Customer	TRISAN CONSTRUCTION
Delivery address	
Project No.	WEST TRUNK SANITARY SEWER UPGRADES
EPS Ø x H	1220 / 1170

Order no.	25716_MHDR07_A
Date.	26-09-2025
Order Date	26-09-2025
Made by	mcon@mcon.com

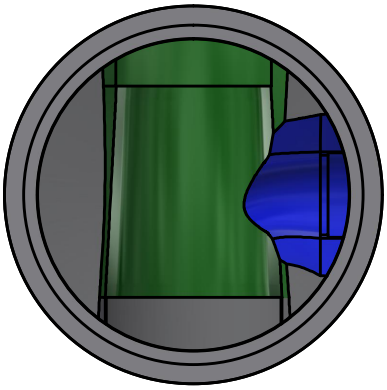

Mould	1220x127x1524 5'
Basesection	1220x127x1524 5'
Height mm	1632
Bottom inserts mm	152
Benching Height mm	610
Benching Slope 0/00	125
Weight kg	3132 kg

	Main Inlet >	1				
Outlet/Inlet	Outlet	Inlet 1	Inlet 2	Inlet 3	Inlet 4	Inlet 5
Connections type	600-24" Concrete	525-21" Concrete	300-12" PVC SDR 35			
Gasket type	S306-34L	S306-32	16M PSX			
Dimension mm.	610	533	299			
Angle 360°	0	180	270			
Invert Level mm.	0	30	150			
2. Invert Level mm.		30	150			
Socket angle 0/00						
Channel Drop mm		30	150			
Straight section mm		50	50			
Note						

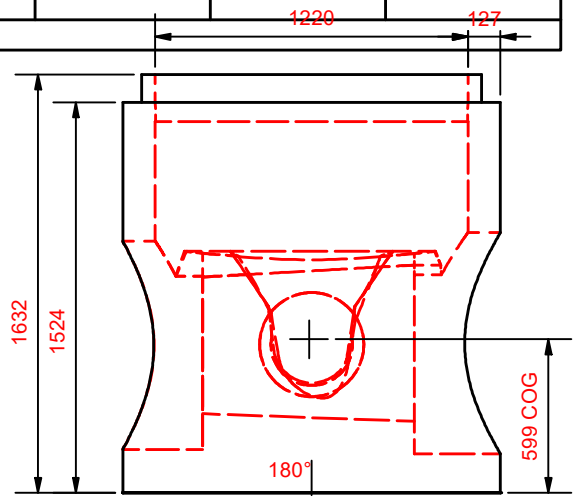

Approved by.	
Control	
Date	

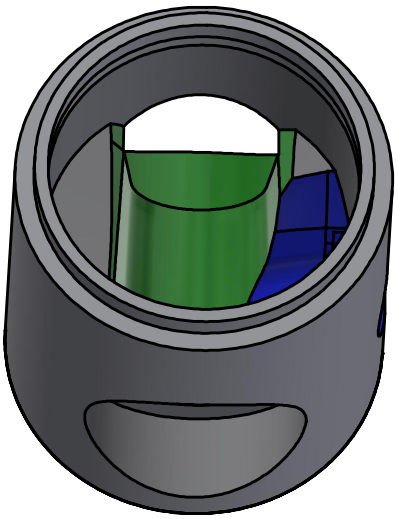

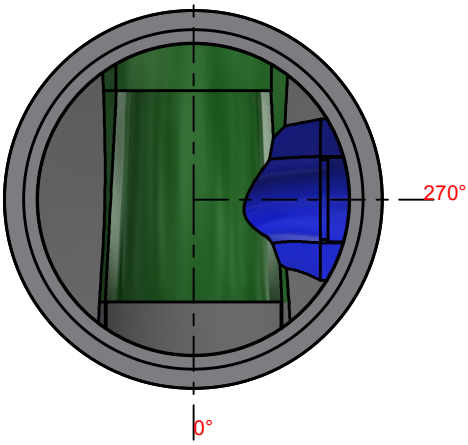

Hawkeye Pedershaab
Concrete Technologies Worldwide ™

M CON
PIPE & PRODUCTS INC

2691 Greenfield Road
Ayr, ON N0B 1E0 Canada

Smartcast Basesection Designer.

Customer	TRISAN CONSTRUCTION
Delivery address	
Project No.	WEST TRUNK SANITARY SEWER UPGRADES
Basesection	1220x127x1524 5'
Order no.	25716_MHDR07_A
Order Date	26-09-2025
Weight kg	3132 kg

Center of gravity	599
EPS raw height	1170
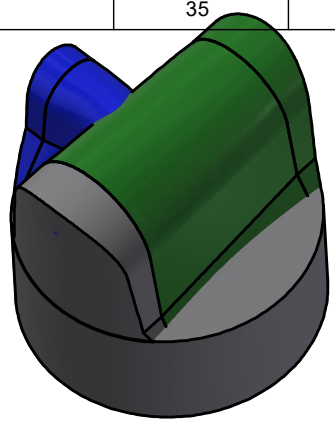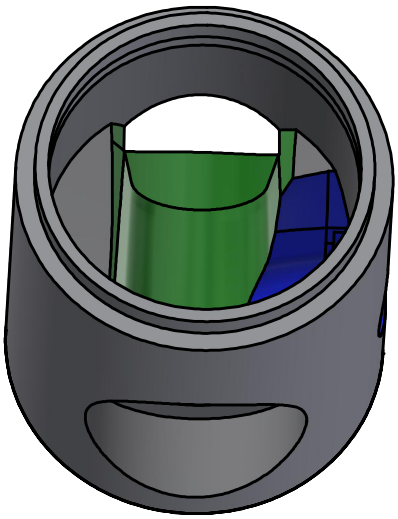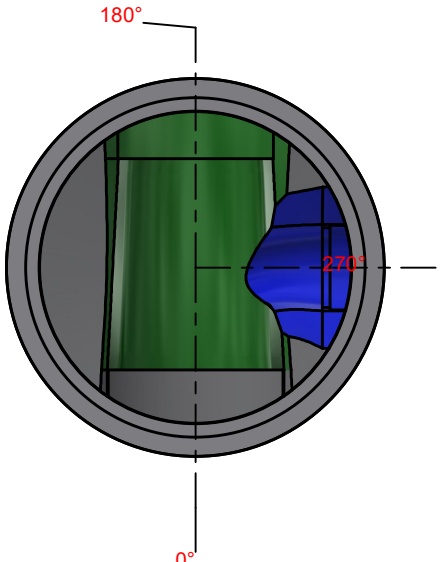
	Main Inlet >	1				
Outlet/Inlet	Outlet	Inlet 1	Inlet 2	Inlet 3	Inlet 4	Inlet 5
Angle 360°	0	180	270			
Invert Level mm.	0	30	150			
Connections type	600-24" Concrete	525-21" Concrete	300-12" PVC SDR 35