Hawkeye Pedershaab
Concrete Technologies Worldwide ™

M CON
PIPE & PRODUCTS INC

2691 Greenfield Road
Ayr, ON N0B 1E0 Canada

Smartcast Basesection Designer. Order/Offer

Customer	TRISAN CONSTRUCTION
Delivery address	
Project No.	WEST TRUNK SANITARY SEWER UPGRADES
EPS Ø x H	1220 / 1170

Order no.	25716_MHDR08_A
Date.	12-12-2025
Order Date	12-12-2025
Made by	mcon@mcon.com

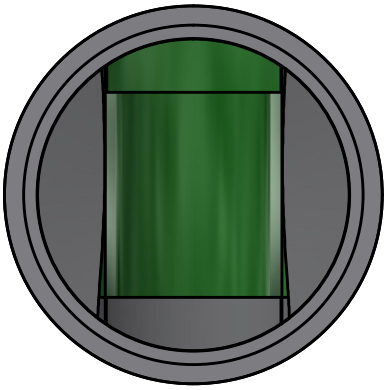

Mould	1220x127x1524 5'
Basesection	1220x127x1524 5'
Height mm	1632
Bottom inserts mm	152
Benching Height mm	610
Benching Slope 0/00	125
Weight kg	3241 kg

	Main Inlet >	1				
Outlet/Inlet	Outlet	Inlet 1	Inlet 2	Inlet 3	Inlet 4	Inlet 5
Connections type	600-24" Concrete	600-24" Concrete				
Gasket type	S306-34L	S306-34L				
Dimension mm.	610	610				
Angle 360°	0	180				
Invert Level mm.	0	30				
2. Invert Level mm.		30				
Socket angle 0/00						
Channel Drop mm		30				
Straight section mm		50				
Note						

Approved by.	
Control	
Date	

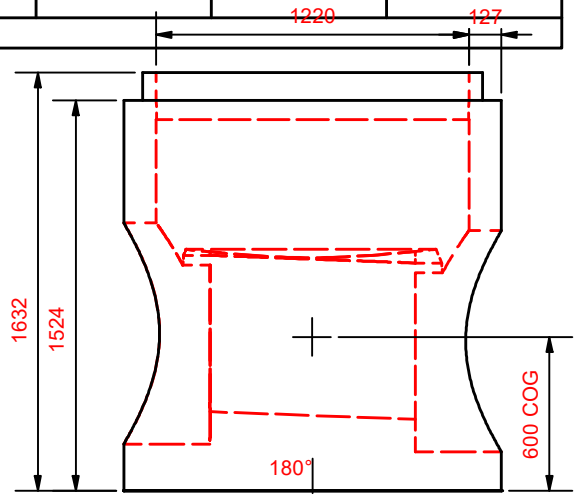

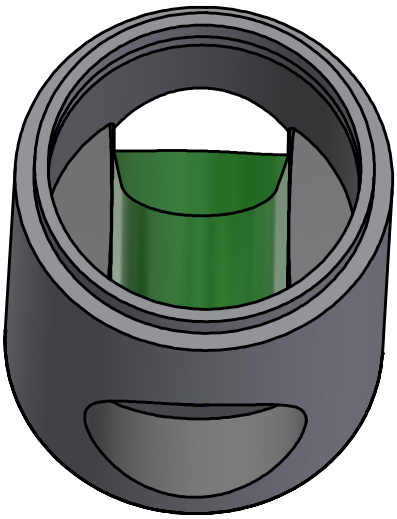

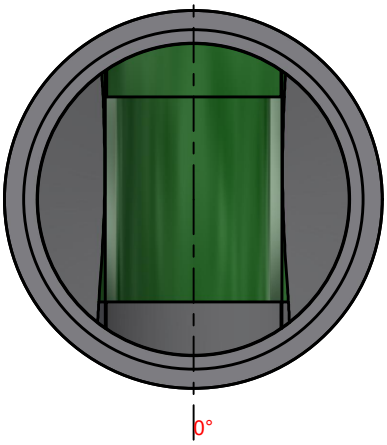

Hawkeye Pedershaab
Concrete Technologies Worldwide ™

M CON
PIPE & PRODUCTS INC

2691 Greenfield Road
Ayr, ON N0B 1E0 Canada

Smartcast Basesection Designer.

Customer	TRISAN CONSTRUCTION
Delivery address	
Project No.	WEST TRUNK SANITARY SEWER UPGRADES
Basesection	1220x127x1524 5'
Order no.	25716_MHDR08_A
Order Date	12-12-2025
Weight kg	3241 kg

Center of gravity	600
EPS raw height	1170
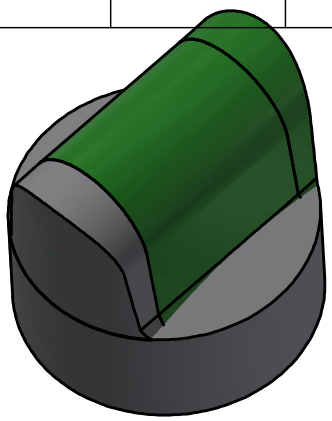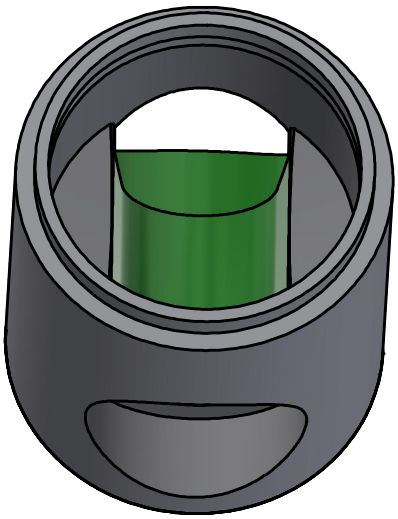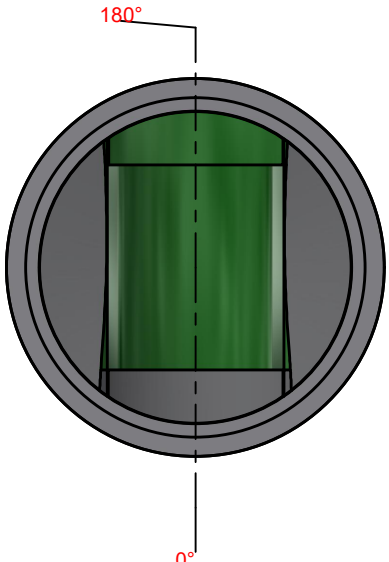
	Main Inlet >	1				
Outlet/Inlet	Outlet	Inlet 1	Inlet 2	Inlet 3	Inlet 4	Inlet 5
Angle 360°	0	180				
Invert Level mm.	0	30				
Connections type	600-24" Concrete	600-24" Concrete