Hawkeye Pedershaab
Concrete Technologies Worldwide ™

M CON
PIPE & PRODUCTS INC

2691 Greenfield Road
Ayr, ON N0B 1E0 Canada

Smartcast Basesection Designer. Order/Offer

Customer	TRISAN CONSTRUCTION
Delivery address	
Project No.	WEST TRUNK SANITARY SEWER UPGRADES
EPS Ø x H	1524 / 1205

Order no.	25716_MHLP03_A
Date.	03-09-2025
Order Date	03-09-2025
Made by	mcon@mcon.com

Mould	1524x152x1676 5,5'
Basesection	1524x152x1676 5,5'
Height mm	1797
Bottom inserts mm	229
Benching Height mm	838
Benching Slope 0/00	125
Weight kg	5808 kg

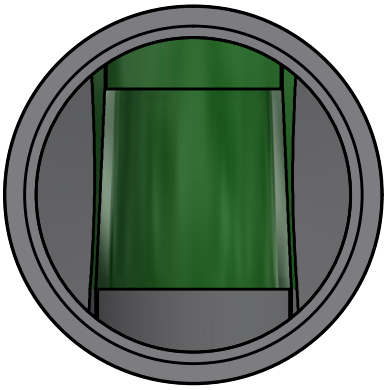

	Main Inlet >	1				
Outlet/Inlet	Outlet	Inlet 1	Inlet 2	Inlet 3	Inlet 4	Inlet 5
Connections type	825-33" Concrete	750-30" Concrete				
Gasket type	S306-46	S306-42L				
Dimension mm.	838	762				
Angle 360°	0	180				
Invert Level mm.	0	30				
2. Invert Level mm.		30				
Socket angle 0/00						
Channel Drop mm		30				
Straight section mm		50				
Note						

Approved by.	
Control	
Date	

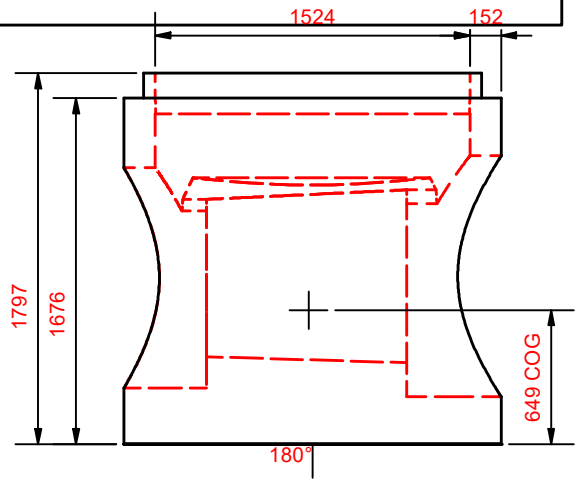

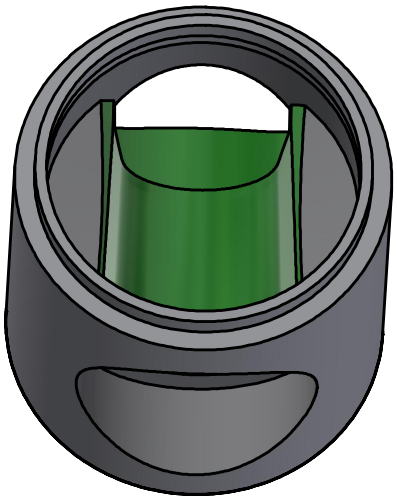

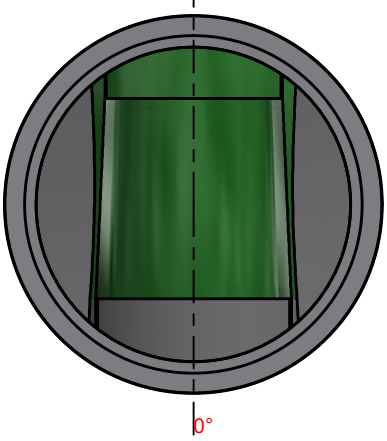

Hawkeye Pedershaab
Concrete Technologies Worldwide ™

M CON
PIPE & PRODUCTS INC

2691 Greenfield Road
Ayr, ON N0B 1E0 Canada

Smartcast Basesection Designer.

Customer	**TRISAN CONSTRUCTION**
Delivery address	
Project No.	**WEST TRUNK SANITARY SEWER UPGRADES**
Basesection	**1524x152x1676 5,5'**
Order no.	**25716_MHLP03_A**
Order Date	**03-09-2025**
Weight kg	**5808 kg**

Center of gravity	649
EPS raw height	1205
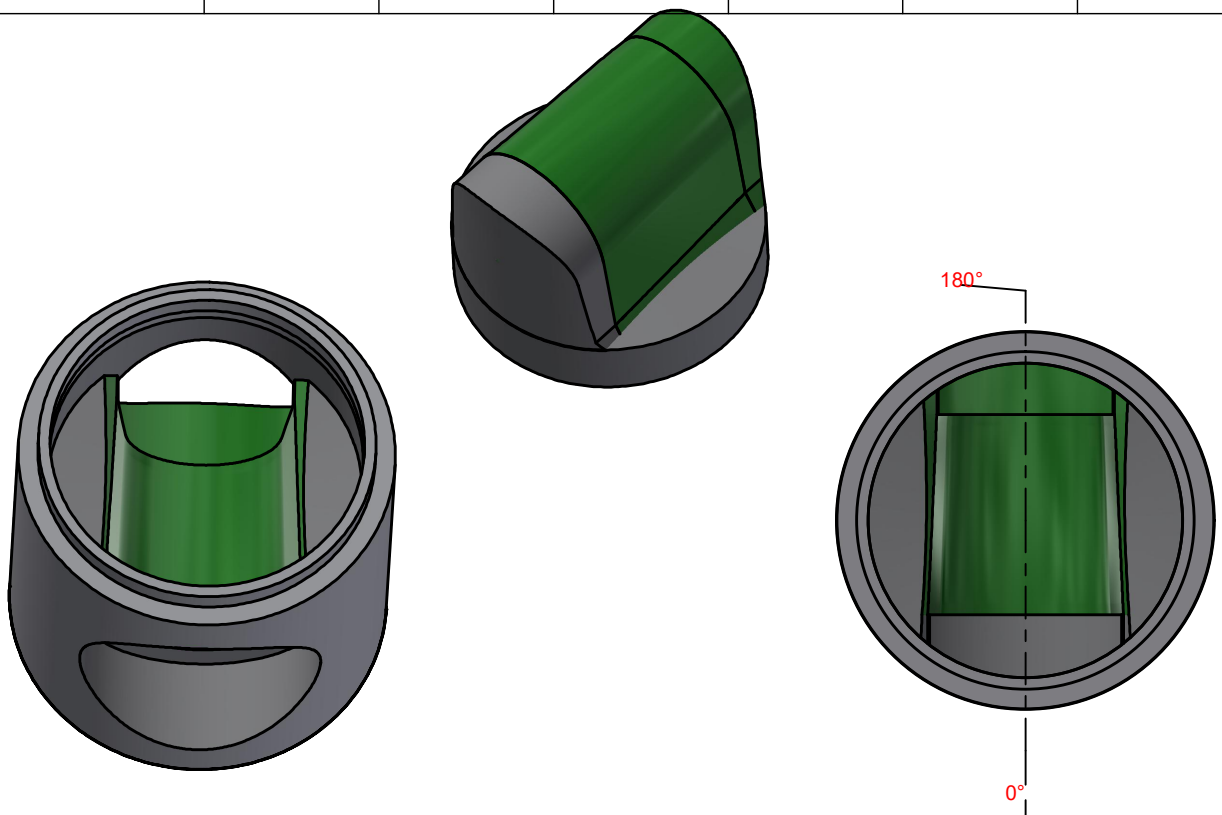
	Main Inlet >	1				
Outlet/Inlet	Outlet	Inlet 1	Inlet 2	Inlet 3	Inlet 4	Inlet 5
Angle 360°	0	180				
Invert Level mm.	0	30				
Connections type	825-33" Concrete	750-30" Concrete