Hawkeye Pedershaab
Concrete Technologies Worldwide ™

M CON
PIPE & PRODUCTS INC

2691 Greenfield Road
Ayr, ON N0B 1E0 Canada

Smartcast Basesection Designer. Order/Offer

Customer	TRISAN CONSTRUCTION
Delivery address	
Project No.	WEST TRUNK SANITARY SEWER UPGRADES
EPS Ø x H	1524 / 1065,5

Order no.	25716_MHLP06_A
Date.	05-09-2025
Order Date	05-09-2025
Made by	mcon@mcon.com

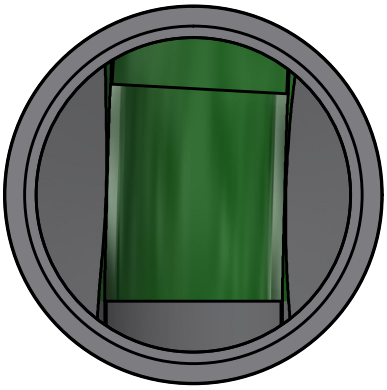

Mould	1524x152x1524 5'
Basesection	1524x152x1524 5'
Height mm	1645
Bottom inserts mm	229
Benching Height mm	762
Benching Slope 0/00	125
Weight kg	5515 kg

	Main Inlet >	1				
Outlet/Inlet	Outlet	Inlet 1	Inlet 2	Inlet 3	Inlet 4	Inlet 5
Connections type	750-30" Concrete	750-30" Concrete				
Gasket type	S306-42L	S306-42L				
Dimension mm.	762	762				
Angle 360°	0	183				
Invert Level mm.	0	10				
2. Invert Level mm.		10				
Socket angle 0/00						
Channel Drop mm		10				
Straight section mm		50				
Note						

Approved by.	
Control	
Date	

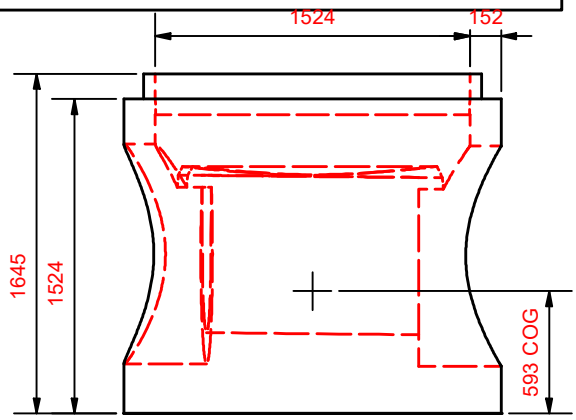

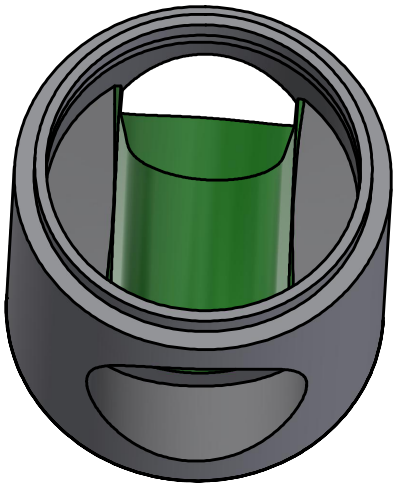

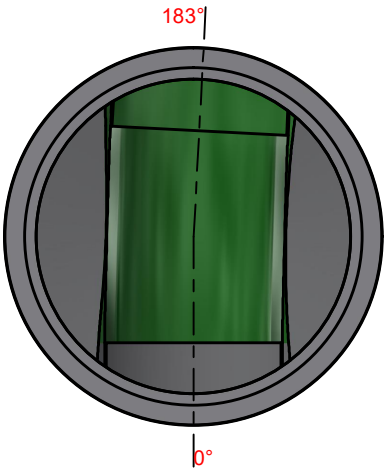

Hawkeye Pedershaab
Concrete Technologies Worldwide ™

M CON
PIPE & PRODUCTS INC

2691 Greenfield Road
Ayr, ON N0B 1E0 Canada

Smartcast Basesection Designer.

Customer	TRISAN CONSTRUCTION
Delivery address	
Project No.	WEST TRUNK SANITARY SEWER UPGRADES
Basesection	1524x152x1524 5'
Order no.	25716_MHLP06_A
Order Date	05-09-2025
Weight kg	5515 kg

Center of gravity	593
EPS raw height	1065,5
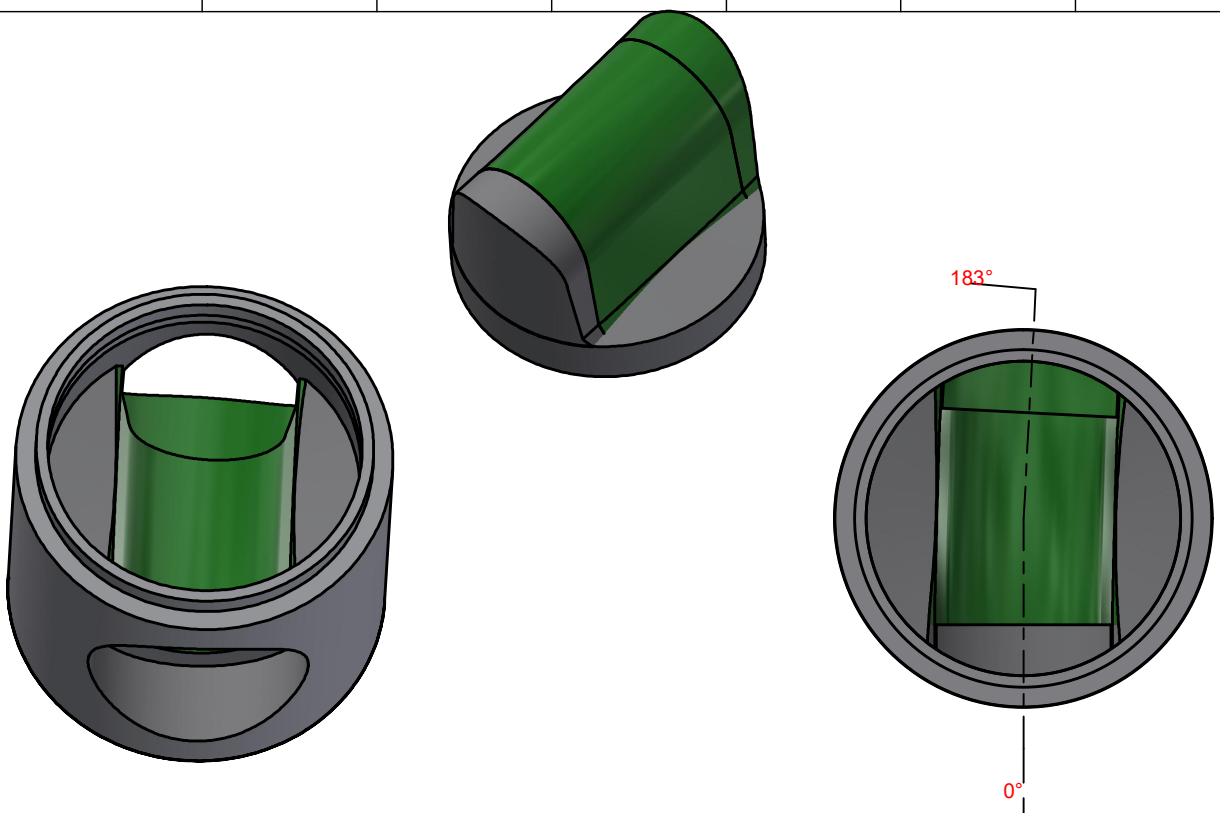
	Main Inlet >	1				
Outlet/Inlet	Outlet	Inlet 1	Inlet 2	Inlet 3	Inlet 4	Inlet 5
Angle 360°	0	183				
Invert Level mm.	0	10				
Connections type	750-30" Concrete	750-30" Concrete