Hawkeye Pedershaab
Concrete Technologies Worldwide ™

M CON
PIPE & PRODUCTS INC

2691 Greenfield Road
Ayr, ON N0B 1E0 Canada

Smartcast Basesection Designer. Order/Offer

Customer	SOVEREIGN CONSTRUCTION
Delivery address	PROPOSED MIXED-USE
Project No.	COMMERCIAL BUILDING 131
	SOUTH EDGEWARE ROAD
EPS Ø x H	1220 / 483

Order no.	25730_SANMH01_A
Date.	09-09-2025
Order Date	09-09-2025
Made by	mcon@mcon.com

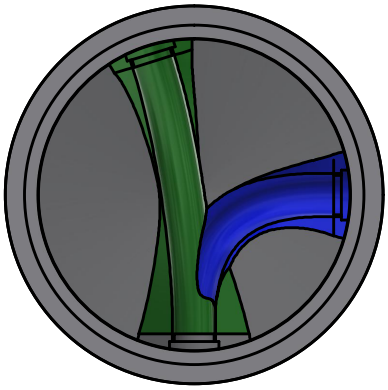

Mould	1220x127x762 2,5'
Basesection	1220x127x762 2,5'
Height mm	870
Bottom inserts mm	152
Benching Height mm	147
Benching Slope 0/00	125
Weight kg	2126 kg

	Main Inlet >	1				
Outlet/Inlet	Outlet	Inlet 1	Inlet 2	Inlet 3	Inlet 4	Inlet 5
Connections type	150-6" PVC SDR 28	150-6" PVC SDR 28	150-6" PVC SDR 28			
Gasket type	10-06 PSX	10-06 PSX	10-06 PSX			
Dimension mm.	150	150	150			
Angle 360°	0	163	270			
Invert Level mm.	0	50	50			
2. Invert Level mm.		50	50			
Socket angle 0/00						
Channel Drop mm		50	50			
Straight section mm		50	50			
Note						

Approved by.	
Control	
Date	

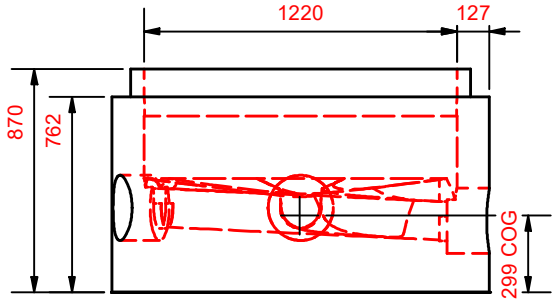

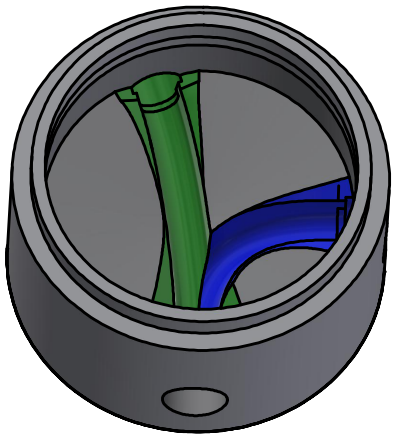

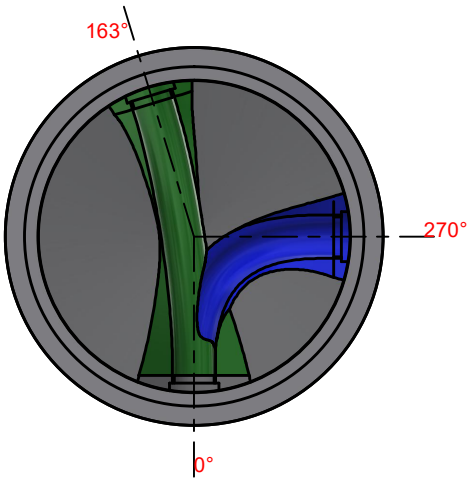

Hawkeye Pedershaab
Concrete Technologies Worldwide ™

M CON
PIPE & PRODUCTS INC

2691 Greenfield Road
Ayr, ON N0B 1E0 Canada

Smartcast Basesection Designer.

Customer	SOVEREIGN CONSTRUCTION
Delivery address	PROPOSED MIXED-USE COMMERCIAL BUILDING
Project No.	131 SOUTH EDGEWARE ROAD
Basesection	1220x127x762 2,5'
Order no.	25730_SANMH01_A
Order Date	09-09-2025
Weight kg	2126 kg

Center of gravity	299
EPS raw height	483
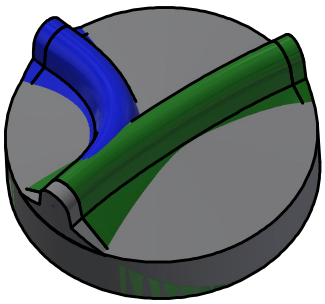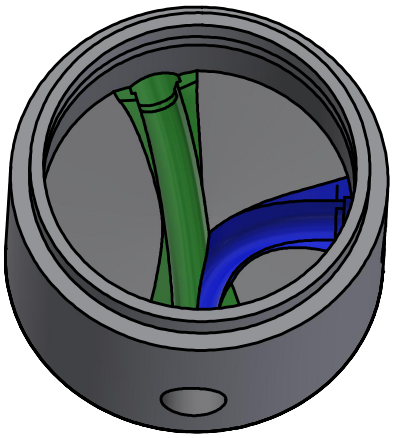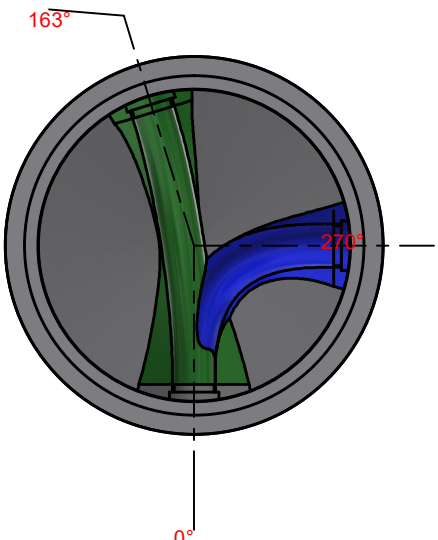
	Main Inlet >	1				
Outlet/Inlet	Outlet	Inlet 1	Inlet 2	Inlet 3	Inlet 4	Inlet 5
Angle 360°	0	163	270			
Invert Level mm.	0	50	50			
Connections type	150-6" PVC SDR 28	150-6" PVC SDR 28	150-6" PVC SDR 28