Hawkeye Pedershaab
Concrete Technologies Worldwide ™

M CON
PIPE & PRODUCTS INC

2691 Greenfield Road
Ayr, ON N0B 1E0 Canada

# Smartcast Basesection Designer. Order/Offer

| | |
|---|---|
| Customer | G. MELO EXCAVATING LTD |
| Delivery address | |
| Project No. | 132 CLAIR ROAD W BLOCK 2 |
| | |
| | |
| EPS Ø x H | 1220 559 |

| | |
|---|---|
| Order no. | 25748_MH01A_A |
| Date. | 21-01-2026 |
| Order Date | 21-01-2026 |
| Made by | mcon@mcon.com |

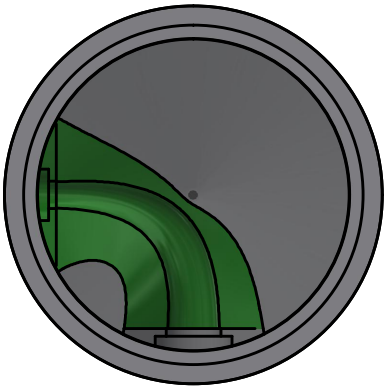

| | |
|---|---|
| Mould | 1220x127x838 2,75' |
| Basesection | 1220x127x838 2,75' |
| Height mm | 946 |
| Bottom inserts mm | 152 |
| Benching Height mm | 101 |
| Benching Slope 0/00 | 125 |
| Weight kg | 2222 kg |

| | Main Inlet > | 1 | | | | |
|---|---|---|---|---|---|---|
| Outlet/Inlet | Outlet | Inlet 1 | Inlet 2 | Inlet 3 | Inlet 4 | Inlet 5 |
| Connections type | 200-8" PVC SDR 35 | 100-4" PVC SDR 28 | | | | |
| Gasket type | 12-08 PSX | 8QRS PSX | | | | |
| Dimension mm. | 201 | 101 | | | | |
| Angle 360° | 0 | 90 | | | | |
| Invert Level mm. | 0 | 100 | | | | |
| 2. Invert Level mm. | | 100 | | | | |
| Socket angle 0/00 | | | | | | |
| Channel Drop mm | | 100 | | | | |
| Straight section mm | | 50 | | | | |
| Note | | | | | | |

| | |
|---|---|
| Approved by. | |
| | |
| Control | |
| | |
| Date | |
| | |

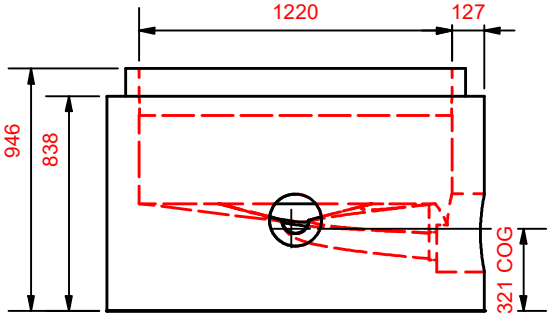

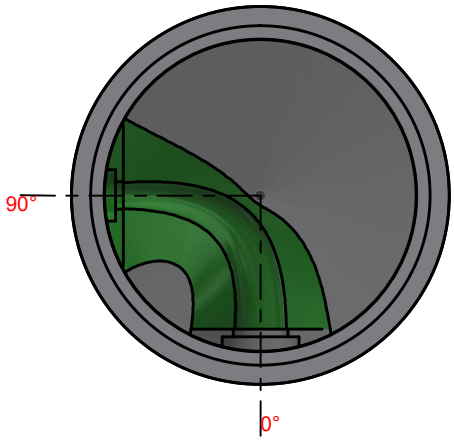

Hawkeye Pedershaab
Concrete Technologies Worldwide ™

M CON
PIPE & PRODUCTS INC

2691 Greenfield Road
Ayr, ON N0B 1E0 Canada

## Smartcast Basesection Designer.

| | |
|---|---|
| Customer | **G. MELO EXCAVATING LTD** |
| Delivery address | |
| Project No. | **132 CLAIR ROAD W BLOCK 2** |
| | |
| | |
| Basesection | **1220x127x838 2,75'** |
| Order no. | **25748_MH01A_A** |
| Order Date | **21-01-2026** |
| Weight kg | **2222 kg** |

| | |
|---|---|
| Center of gravity | 321 |
| EPS raw height | 559 |
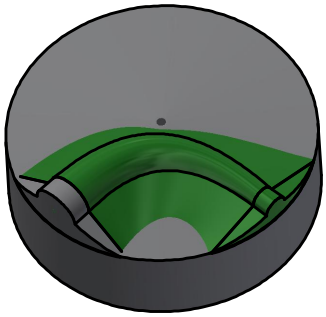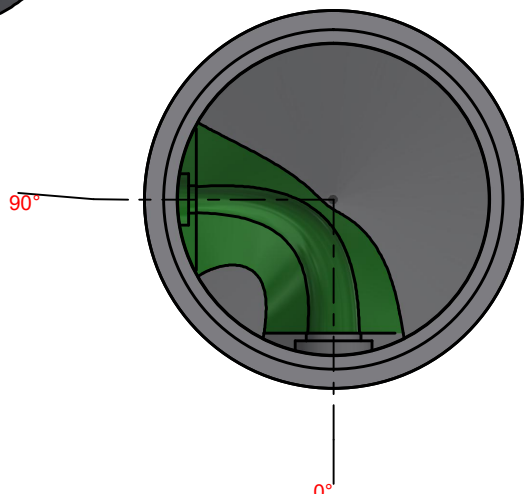
| | Main Inlet > | 1 | | | | |
|---|---|---|---|---|---|---|
| Outlet/Inlet | Outlet | Inlet 1 | Inlet 2 | Inlet 3 | Inlet 4 | Inlet 5 |
| Angle 360° | 0 | 90 | | | | |
| Invert Level mm. | 0 | 100 | | | | |
| Connections type | 200-8" PVC SDR 35 | 100-4" PVC SDR 28 | | | | |