Hawkeye Pedershaab
Concrete Technologies Worldwide ™

M CON
PIPE & PRODUCTS INC

2691 Greenfield Road
Ayr, ON N0B 1E0 Canada

Smartcast Basesection Designer. Order/Offer

Customer	G. MELO EXCAVATING LTD
Delivery address	
Project No.	132 CLAIR ROAD W BLOCK 2
EPS Ø x H	1220 / 483

Order no.	25748_MH05A_A
Date.	21-01-2026
Order Date	21-01-2026
Made by	mcon@mcon.com

Mould	1220x127x762 2,5'
Basesection	1220x127x762 2,5'
Height mm	870
Bottom inserts mm	152
Benching Height mm	101
Benching Slope 0/00	125
Weight kg	2083 kg

	Main Inlet >		1			
Outlet/Inlet	Outlet	Inlet 1	Inlet 2	Inlet 3	Inlet 4	Inlet 5
Connections type	200-8" PVC SDR 35	100-4" PVC SDR 28	100-4" PVC SDR 28			
Gasket type	12-08 PSX	8QRS PSX	8QRS PSX			
Dimension mm.	201	101	101			
Angle 360°	0	90	270			
Invert Level mm.	0	100	100			
2. Invert Level mm.		100	100			
Socket angle 0/00						
Channel Drop mm		100	100			
Straight section mm		50	50			
Note						

Approved by.	
Control	
Date	

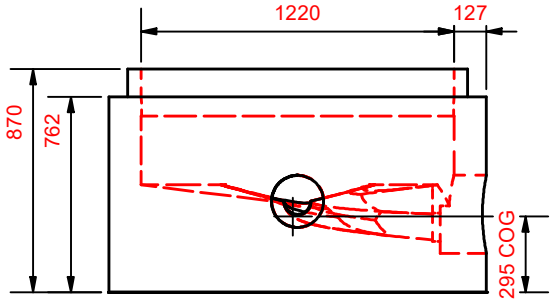

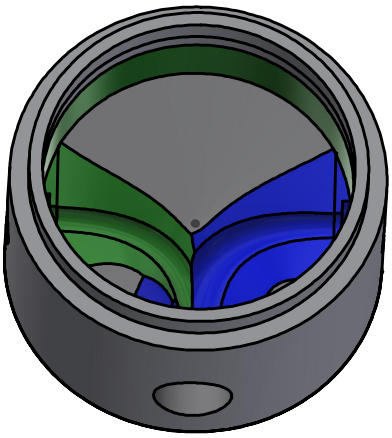

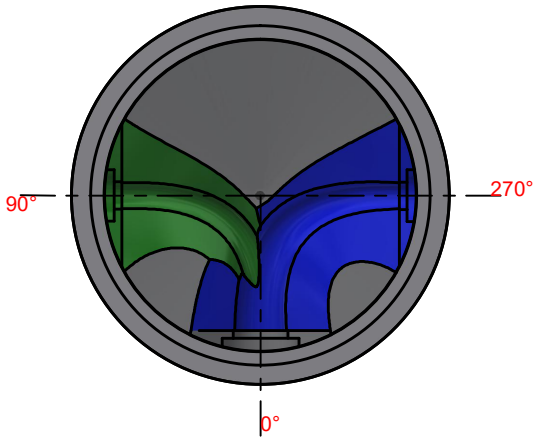

Hawkeye Pedershaab
Concrete Technologies Worldwide ™

M CON
PIPE & PRODUCTS INC

2691 Greenfield Road
Ayr, ON N0B 1E0 Canada

Smartcast Basesection Designer.

Customer	**G. MELO EXCAVATING LTD**
Delivery address	
Project No.	**132 CLAIR ROAD W BLOCK 2**
Basesection	**1220x127x762 2,5'**
Order no.	**25748_MH05A_A**
Order Date	**21-01-2026**
Weight kg	**2083 kg**

Center of gravity	295
EPS raw height	483
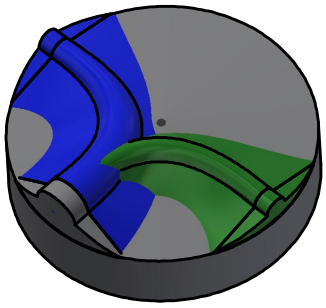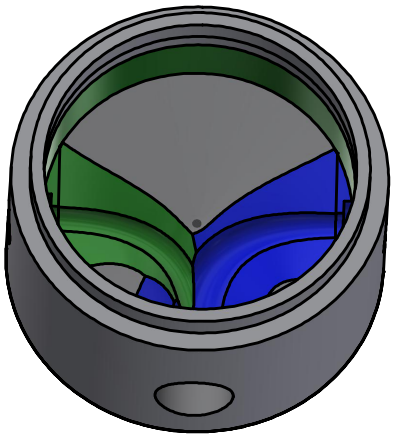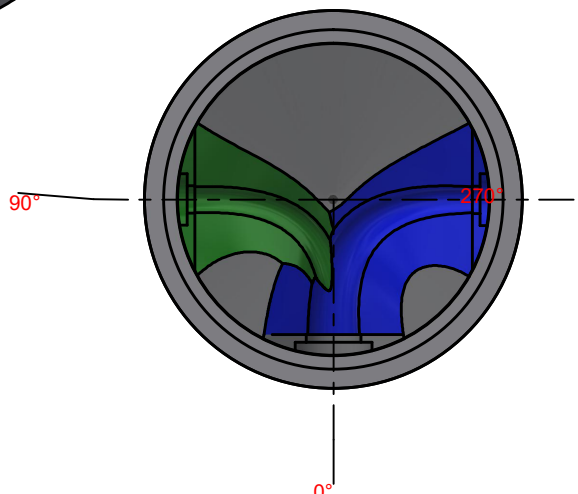
	Main Inlet >		1			
Outlet/Inlet	Outlet	Inlet 1	Inlet 2	Inlet 3	Inlet 4	Inlet 5
Angle 360°	0	90	270			
Invert Level mm.	0	100	100			
Connections type	200-8" PVC SDR 35	100-4" PVC SDR 28	100-4" PVC SDR 28