Hawkeye Pedershaab
Concrete Technologies Worldwide ™

M CON
PIPE & PRODUCTS INC

2691 Greenfield Road
Ayr, ON N0B 1E0 Canada

Smartcast Basesection Designer. Order/Offer

Customer	INTEGROY CONSTRUCTION INC
Delivery address	
Project No.	CAIVAN (ARBOR WEST II) INC BLOCK 167
EPS Ø x H	1220 / 540

Order no.	25862_MH02_A
Date.	16-10-2025
Order Date	16-10-2025
Made by	mcon@mcon.com

Mould	1220x127x838 2,75'
Basesection	1220x127x838 2,75'
Height mm	946
Bottom inserts mm	152
Benching Height mm	366
Benching Slope 0/00	125
Weight kg	2620 kg

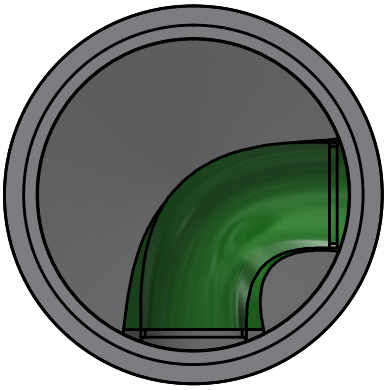

	Main Inlet >	1				
Outlet/Inlet	Outlet	Inlet 1	Inlet 2	Inlet 3	Inlet 4	Inlet 5
Connections type	375-15" PVC SDR 35	375-15" PVC SDR 35				
Gasket type	20Y PSX	20Y PSX				
Dimension mm.	366	366				
Angle 360°	0	270				
Invert Level mm.	0	80				
2. Invert Level mm.		80				
Socket angle 0/00						
Channel Drop mm		80				
Straight section mm		50				
Note						

Approved by.	
Control	
Date	

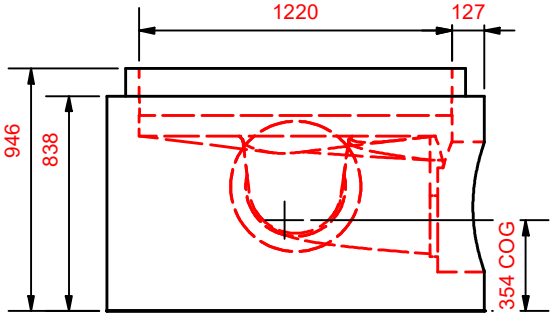

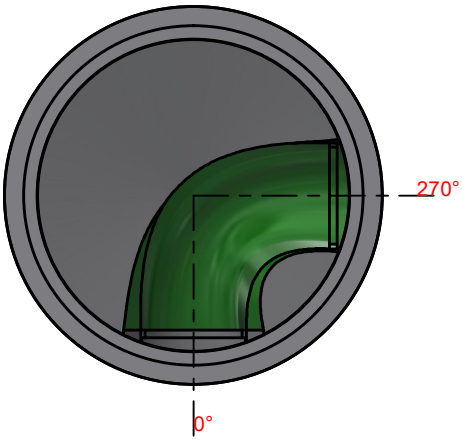

Hawkeye Pedershaab
Concrete Technologies Worldwide ™

M CON
PIPE & PRODUCTS INC

2691 Greenfield Road
Ayr, ON N0B 1E0 Canada

Smartcast Basesection Designer.

Customer	INTEGROY CONSTRUCTION INC
Delivery address	
Project No.	CAIVAN (ARBOR WEST II) INC BLOCK 167
Basesection	1220x127x838 2,75'
Order no.	25862_MH02_A
Order Date	16-10-2025
Weight kg	2620 kg

Center of gravity	354
EPS raw height	540
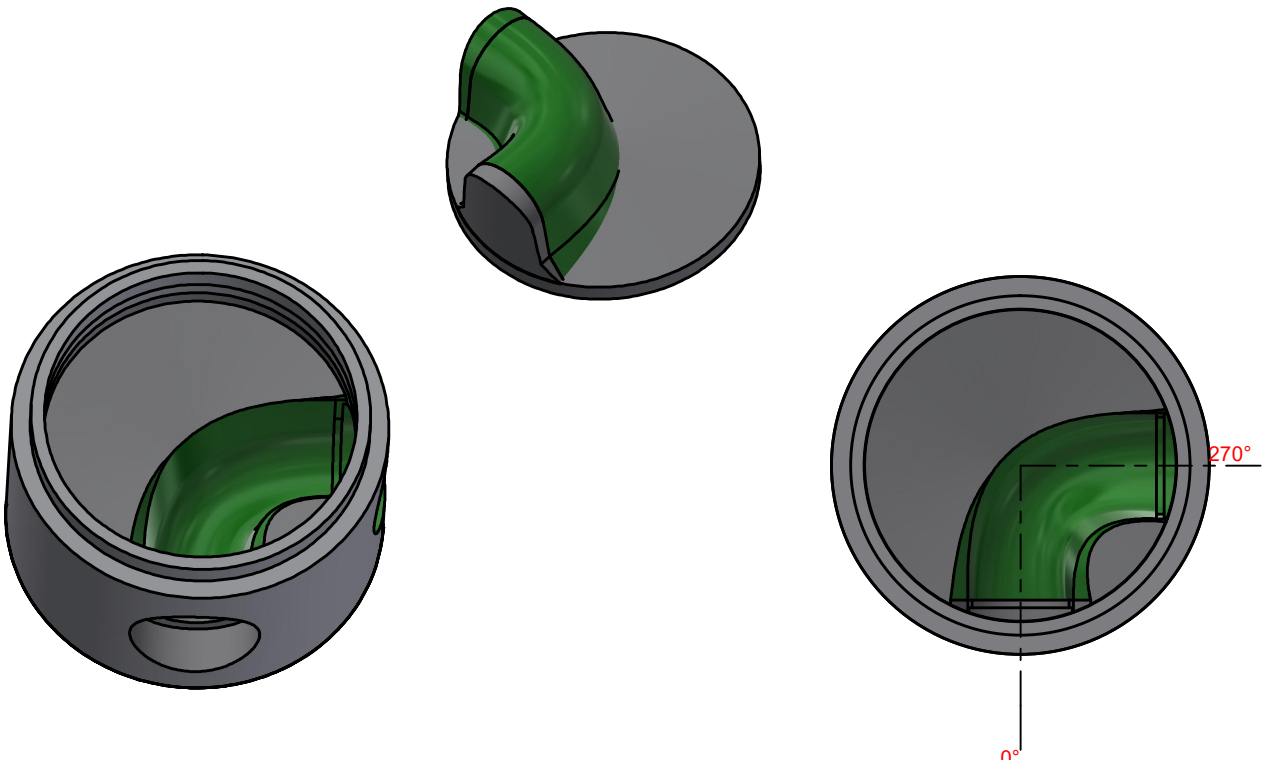
	Main Inlet >	1				
Outlet/Inlet	Outlet	Inlet 1	Inlet 2	Inlet 3	Inlet 4	Inlet 5
Angle 360°	0	270				
Invert Level mm.	0	80				
Connections type	375-15" PVC SDR 35	375-15" PVC SDR 35