Hawkeye Pedershaab
Concrete Technologies Worldwide ™

M CON
PIPE & PRODUCTS INC

2691 Greenfield Road
Ayr, ON N0B 1E0 Canada

Smartcast Basesection Designer. Order/Offer

Customer	INTEGROY CONSTRUCTION INC
Delivery address	
Project No.	CAIVAN (ARBOR WEST II) INC BLOCK 167
EPS Ø x H	1220 637

Order no.	25862_MH04_A
Date.	16-10-2025
Order Date	16-10-2025
Made by	mcon@mcon.com

Mould	1220x127x991 3,25'
Basesection	1220x127x991 3,25'
Height mm	1099
Bottom inserts mm	152
Benching Height mm	456
Benching Slope 0/00	125
Weight kg	2686 kg

	Main Inlet >	1				
Outlet/Inlet	Outlet	Inlet 1	Inlet 2	Inlet 3	Inlet 4	Inlet 5
Connections type	450-18" Concrete	375-15" PVC SDR 35	375-15" PVC SDR 35			
Gasket type	28A PSX-2	20Y PSX	20Y PSX			
Dimension mm.	457	366	366			
Angle 360°	0	180	270			
Invert Level mm.	0	80	80			
2. Invert Level mm.		80	80			
Socket angle 0/00						
Channel Drop mm		80	80			
Straight section mm		50	50			
Note						

Approved by.	
Control	
Date	

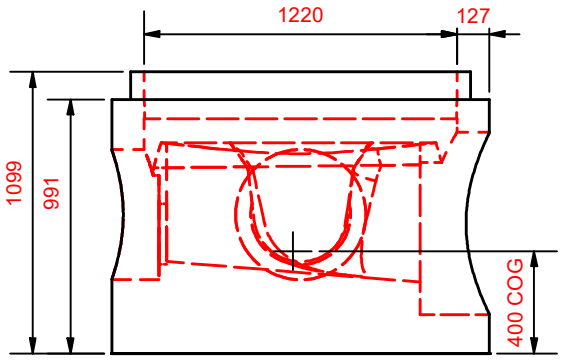

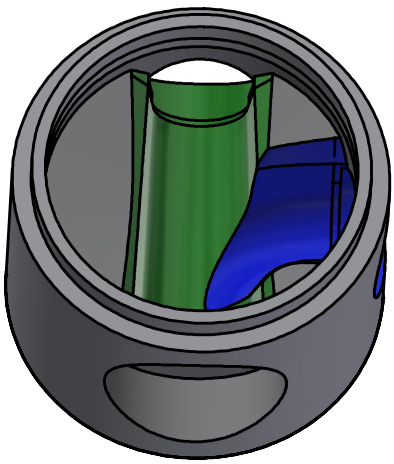

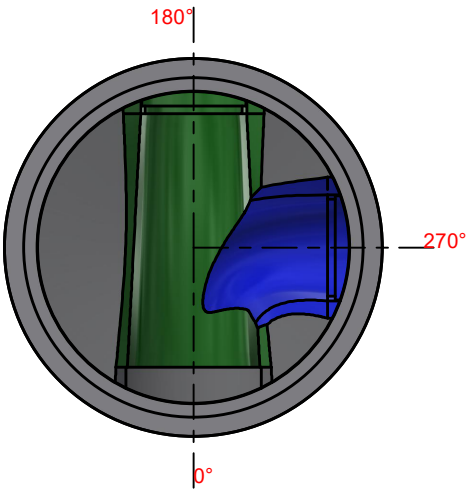

Hawkeye Pedershaab
Concrete Technologies Worldwide ™

M CON
PIPE & PRODUCTS INC

2691 Greenfield Road
Ayr, ON N0B 1E0 Canada

Smartcast Basesection Designer.

Customer	INTEGROY CONSTRUCTION INC
Delivery address	
Project No.	CAIVAN (ARBOR WEST II) INC BLOCK 167
Basesection	1220x127x991 3,25'
Order no.	25862_MH04_A
Order Date	16-10-2025
Weight kg	2686 kg

Center of gravity	400
EPS raw height	637
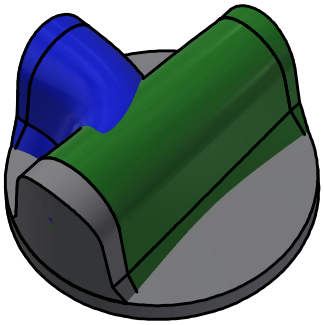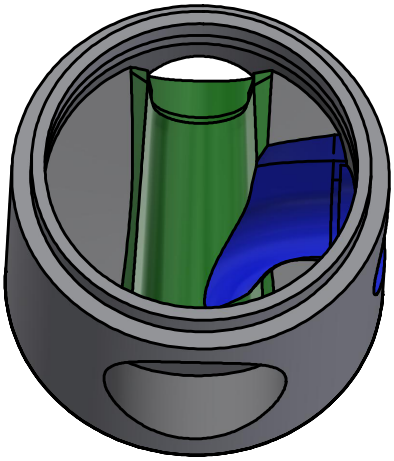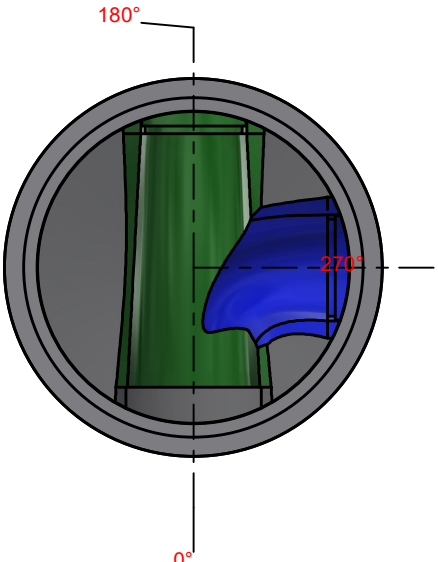
	Main Inlet >	1				
Outlet/Inlet	Outlet	Inlet 1	Inlet 2	Inlet 3	Inlet 4	Inlet 5
Angle 360°	0	180	270			
Invert Level mm.	0	80	80			
Connections type	450-18" Concrete	375-15" PVC SDR 35	375-15" PVC SDR 35