Hawkeye Pedershaab
Concrete Technologies Worldwide ™

M CON
PIPE & PRODUCTS INC

2691 Greenfield Road
Ayr, ON N0B 1E0 Canada

Smartcast Basesection Designer. Order/Offer

Customer	INTEGROY CONSTRUCTION INC
Delivery address	
Project No.	CAIVAN (ARBOR WEST II) INC BLOCK 167
EPS Ø x H	1220 / 776,5

Order no.	25862_MH07_A
Date.	16-10-2025
Order Date	16-10-2025
Made by	mcon@mcon.com

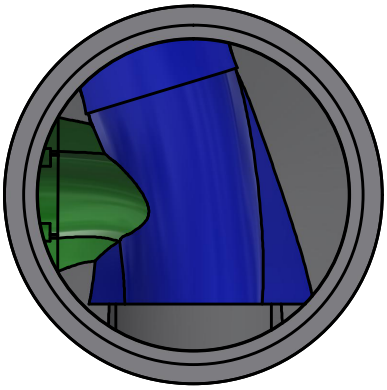

Mould	1220x127x1143 3,75'
Basesection	1220x127x1143 3,75'
Height mm	1251
Bottom inserts mm	152
Benching Height mm	533
Benching Slope 0/00	125
Weight kg	2729 kg

	Main Inlet >		1			
Outlet/Inlet	Outlet	Inlet 1	Inlet 2	Inlet 3	Inlet 4	Inlet 5
Connections type	525-21" Concrete	300-12" PVC SDR 35	525-21" Concrete			
Gasket type	S306-32	16M PSX	S306-32			
Dimension mm.	533	299	533			
Angle 360°	0	90	163			
Invert Level mm.	0	220	70			
2. Invert Level mm.		150	70			
Socket angle 0/00						
Channel Drop mm		150	70			
Straight section mm		50	50			
Note						

Approved by.	
Control	
Date	

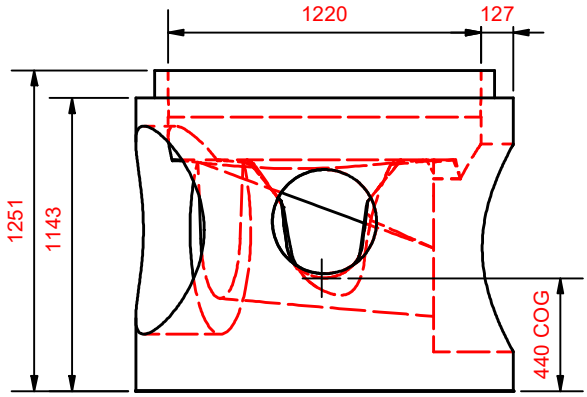

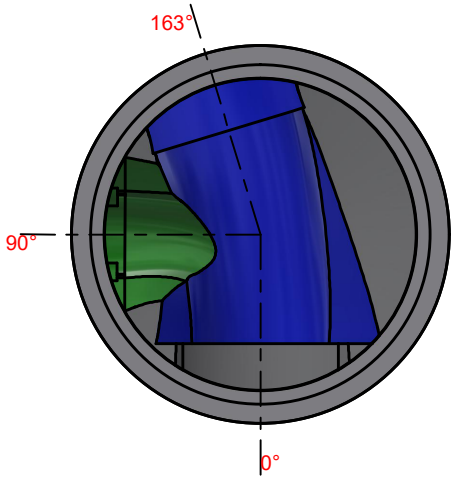

Hawkeye Pedershaab
Concrete Technologies Worldwide ™

M CON
PIPE & PRODUCTS INC

2691 Greenfield Road
Ayr, ON N0B 1E0 Canada

Smartcast Basesection Designer.

Customer	INTEGROY CONSTRUCTION INC
Delivery address	
Project No.	CAIVAN (ARBOR WEST II) INC BLOCK 167
Basesection	1220x127x1143 3,75'
Order no.	25862_MH07_A
Order Date	16-10-2025
Weight kg	2729 kg

Center of gravity	440
EPS raw height	776,5
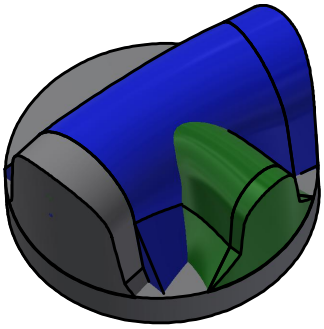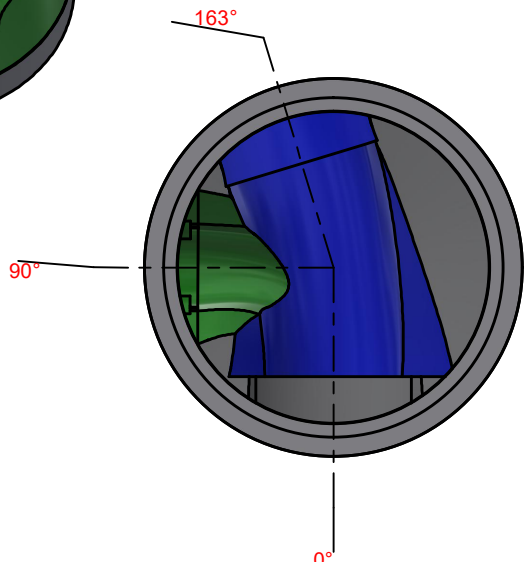
	Main Inlet >		1			
Outlet/Inlet	Outlet	Inlet 1	Inlet 2	Inlet 3	Inlet 4	Inlet 5
Angle 360°	0	90	163			
Invert Level mm.	0	220	70			
Connections type	525-21" Concrete	300-12" PVC SDR 35	525-21" Concrete