Hawkeye Pedershaab
Concrete Technologies Worldwide ™

M CON
PIPE & PRODUCTS INC

2691 Greenfield Road
Ayr, ON N0B 1E0 Canada

# Smartcast Basesection Designer. Order/Offer

| | |
|---|---|
| Customer | INTEGROY CONSTRUCTION INC |
| Delivery address | |
| Project No. | CAIVAN (ARBOR WEST II) INC BLOCK 167 |
| | |
| | |
| EPS Ø x H | 1220 / 852,5 |

| | |
|---|---|
| Order no. | 25862_MH08_A |
| Date. | 16-10-2025 |
| Order Date | 16-10-2025 |
| Made by | mcon@mcon.com |

| | |
|---|---|
| Mould | 1220x127x1219 4' |
| Basesection | 1220x127x1219 4' |
| Height mm | 1327 |
| Bottom inserts mm | 152 |
| Benching Height mm | 533 |
| Benching Slope 0/00 | 125 |
| Weight kg | 3075 kg |

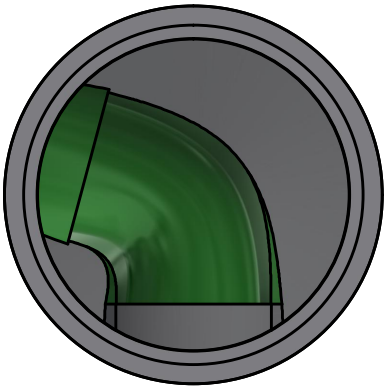

| | Main Inlet > | 1 | | | | |
|---|---|---|---|---|---|---|
| Outlet/Inlet | Outlet | Inlet 1 | Inlet 2 | Inlet 3 | Inlet 4 | Inlet 5 |
| Connections type | 525-21" Concrete | 525-21" Concrete | | | | |
| Gasket type | S306-32 | S306-32 | | | | |
| Dimension mm. | 533 | 533 | | | | |
| Angle 360° | 0 | 105 | | | | |
| Invert Level mm. | 0 | 80 | | | | |
| 2. Invert Level mm. | | 80 | | | | |
| Socket angle 0/00 | | | | | | |
| Channel Drop mm | | 80 | | | | |
| Straight section mm | | 50 | | | | |
| Note | | | | | | |

| | |
|---|---|
| Approved by. | |
| | |
| Control | |
| | |
| Date | |
| | |

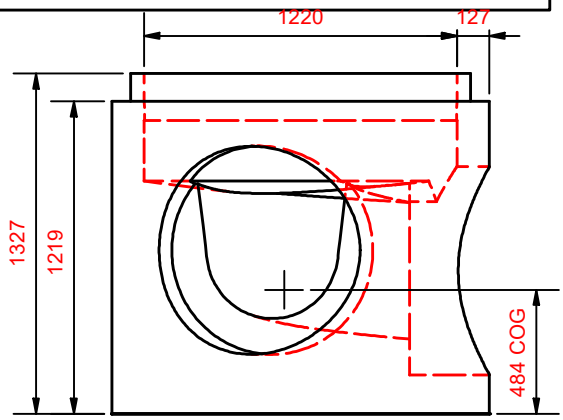

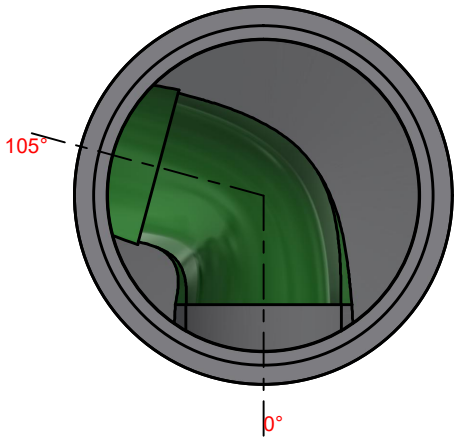

Hawkeye Pedershaab
Concrete Technologies Worldwide ™

M CON
PIPE & PRODUCTS INC

2691 Greenfield Road
Ayr, ON N0B 1E0 Canada

## Smartcast Basesection Designer.

| | |
|---|---|
| Customer | INTEGROY CONSTRUCTION INC |
| Delivery address | |
| Project No. | CAIVAN (ARBOR WEST II) INC BLOCK 167 |
| | |
| | |
| Basesection | 1220x127x1219 4' |
| Order no. | 25862_MH08_A |
| Order Date | 16-10-2025 |
| Weight kg | 3075 kg |

| | |
|---|---|
| Center of gravity | 484 |
| EPS raw height | 852,5 |
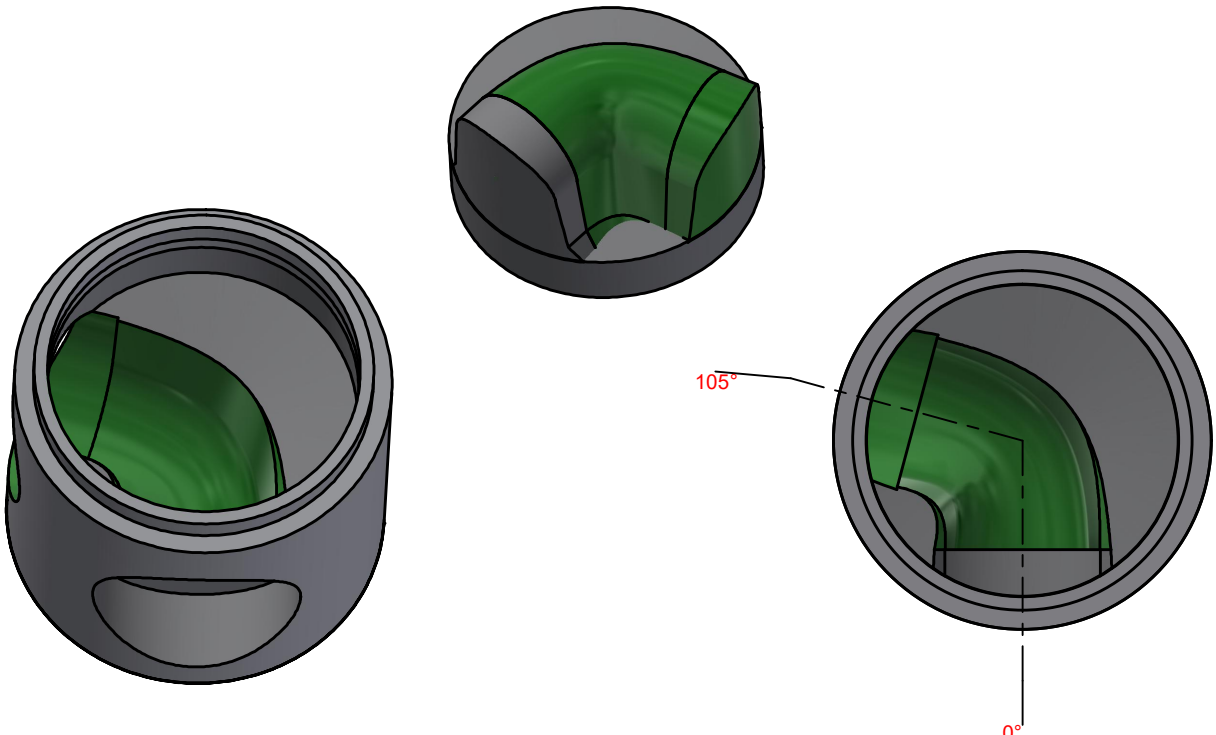
| | Main Inlet > | 1 | | | | |
|---|---|---|---|---|---|---|
| Outlet/Inlet | Outlet | Inlet 1 | Inlet 2 | Inlet 3 | Inlet 4 | Inlet 5 |
| Angle 360° | 0 | 105 | | | | |
| Invert Level mm. | 0 | 80 | | | | |
| Connections type | 525-21" Concrete | 525-21" Concrete | | | | |