Hawkeye Pedershaab
Concrete Technologies Worldwide ™

M CON
PIPE & PRODUCTS INC

2691 Greenfield Road
Ayr, ON N0B 1E0 Canada

Smartcast Basesection Designer. Order/Offer

Customer	INTEGROY CONSTRUCTION INC
Delivery address	
Project No.	CAIVAN (ARBOR WEST II) INC BLOCK 167
EPS Ø x H	1220 / 712

Order no.	25862_MH7A_A
Date.	16-10-2025
Order Date	16-10-2025
Made by	mcon@mcon.com

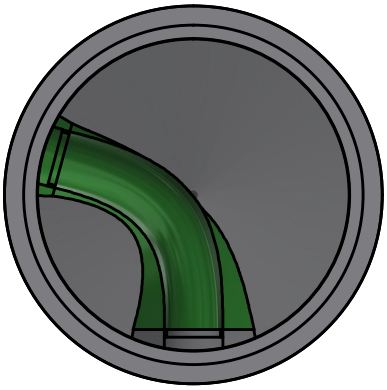

Mould	1220x127x991 3,25'
Basesection	1220x127x991 3,25'
Height mm	1099
Bottom inserts mm	152
Benching Height mm	201
Benching Slope 0/00	125
Weight kg	2620 kg

	Main Inlet >	1				
Outlet/Inlet	Outlet	Inlet 1	Inlet 2	Inlet 3	Inlet 4	Inlet 5
Connections type	200-8" PVC SDR 35	200-8" PVC SDR 35				
Gasket type	12-08 PSX	12-08 PSX				
Dimension mm.	201	201				
Angle 360°	0	105				
Invert Level mm.	0	80				
2. Invert Level mm.		80				
Socket angle 0/00						
Channel Drop mm		80				
Straight section mm		50				
Note						

Approved by.	
Control	
Date	

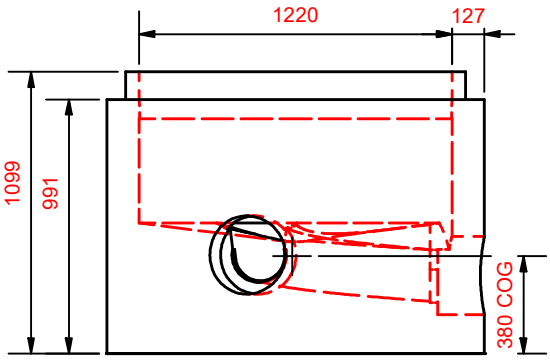

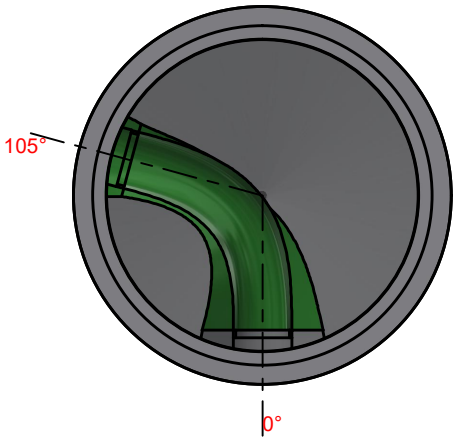

Hawkeye Pedershaab
Concrete Technologies Worldwide ™

M CON
PIPE & PRODUCTS INC

2691 Greenfield Road
Ayr, ON N0B 1E0 Canada

Smartcast Basesection Designer.

Customer	INTEGROY CONSTRUCTION INC
Delivery address	
Project No.	CAIVAN (ARBOR WEST II) INC BLOCK 167
Basesection	1220x127x991 3,25'
Order no.	25862_MH7A_A
Order Date	16-10-2025
Weight kg	2620 kg

Center of gravity	380
EPS raw height	712
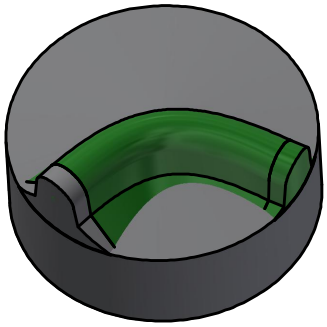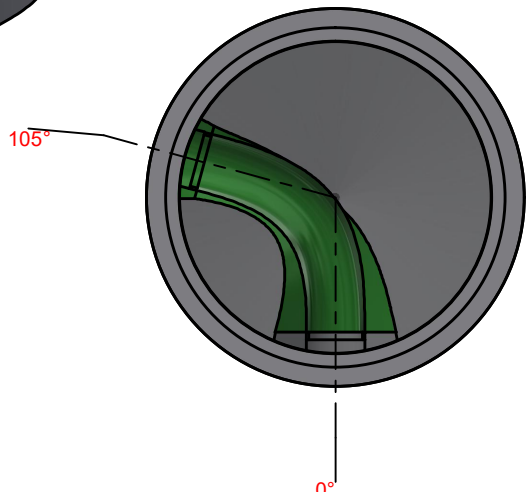
	Main Inlet >	1				
Outlet/Inlet	Outlet	Inlet 1	Inlet 2	Inlet 3	Inlet 4	Inlet 5
Angle 360°	0	105				
Invert Level mm.	0	80				
Connections type	200-8" PVC SDR 35	200-8" PVC SDR 35