Hawkeye Pedershaab
Concrete Technologies Worldwide ™

M CON
PIPE & PRODUCTS INC

2691 Greenfield Road
Ayr, ON N0B 1E0 Canada

Smartcast Basesection Designer. Order/Offer

Customer	J-AAR EXCAVATING LIMITED
Delivery address	
Project No.	PROPOSED RESIDENTIAL BUILDING TOWER A 15 CAPULET WALK
EPS Ø x H	1220 407

Order no.	25990_SANMH01_A
Date.	14-10-2025
Order Date	14-10-2025
Made by	mcon@mcon.com

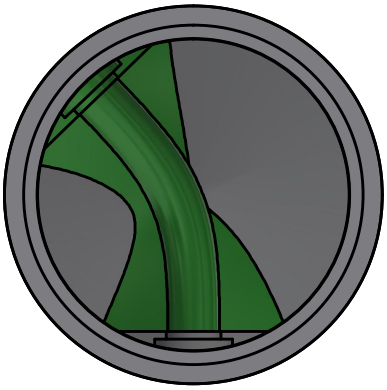

Mould	1220x127x686 2,25'
Basesection	1220x127x686 2,25'
Height mm	794
Bottom inserts mm	152
Benching Height mm	101
Benching Slope 0/00	125
Weight kg	1896 kg

	Main Inlet >	1				
Outlet/Inlet	Outlet	Inlet 1	Inlet 2	Inlet 3	Inlet 4	Inlet 5
Connections type	200-8" PVC SDR 35	200-8" PVC SDR 35				
Gasket type	12-08 PSX	12-08 PSX				
Dimension mm.	201	201				
Angle 360°	0	136				
Invert Level mm.	0	30				
2. Invert Level mm.		30				
Socket angle 0/00						
Channel Drop mm		30				
Straight section mm		50				
Note						

Approved by.	
Control	
Date	

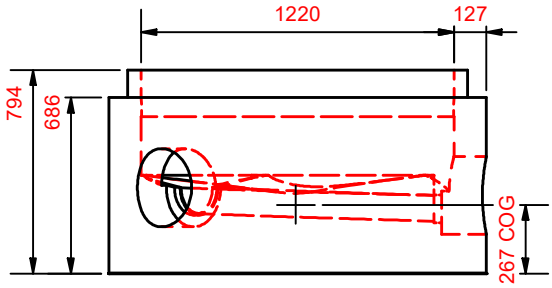

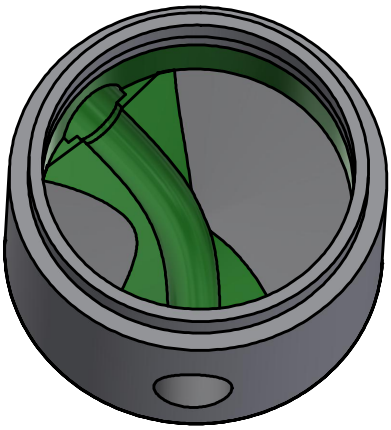

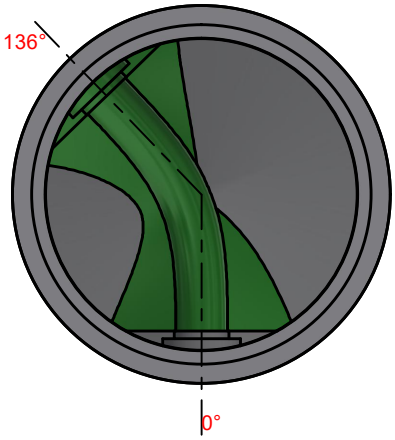

Hawkeye Pedershaab
Concrete Technologies Worldwide ™

M CON
PIPE & PRODUCTS INC

2691 Greenfield Road
Ayr, ON N0B 1E0 Canada

Smartcast Basesection Designer.

Customer	J-AAR EXCAVATING LIMITED
Delivery address	PROPOSED RESIDENTIAL
Project No.	BUILDING TOWER A 15
	CAPULET WALK
Basesection	1220x127x686 2,25'
Order no.	25990_SANMH01_A
Order Date	14-10-2025
Weight kg	1896 kg

Center of gravity	267
EPS raw height	407
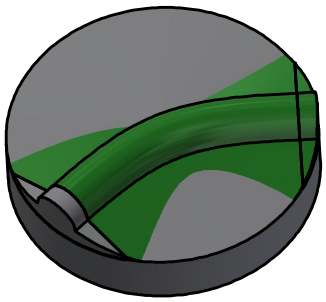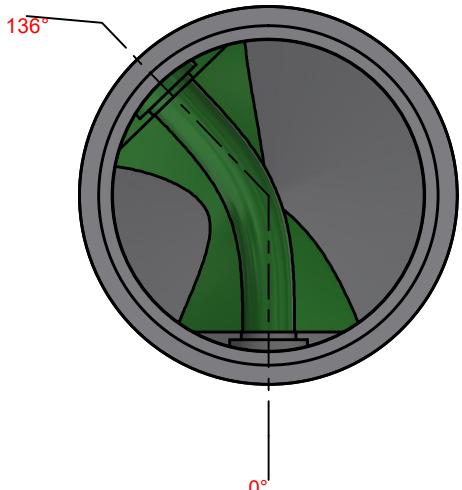
	Main Inlet >	1				
Outlet/Inlet	Outlet	Inlet 1	Inlet 2	Inlet 3	Inlet 4	Inlet 5
Angle 360°	0	136				
Invert Level mm.	0	30				
Connections type	200-8" PVC SDR 35	200-8" PVC SDR 35