Hawkeye Pedershaab
Concrete Technologies Worldwide ™

M CON
PIPE & PRODUCTS INC

2691 Greenfield Road
Ayr, ON N0B 1E0 Canada

# Smartcast Basesection Designer. Order/Offer

| | |
|---|---|
| Customer | J-AAR EXCAVATING LIMITED |
| Delivery address | |
| Project No. | PROPOSED RESIDENTIAL BUILDING TOWER A 15 CAPULET WALK |
| EPS Ø x H | 1220 407 |

| | |
|---|---|
| Order no. | 25990_SANMH03_A |
| Date. | 14-10-2025 |
| Order Date | 14-10-2025 |
| Made by | mcon@mcon.com |

| | |
|---|---|
| Mould | 1220x127x686 2,25' |
| Basesection | 1220x127x686 2,25' |
| Height mm | 794 |
| Bottom inserts mm | 152 |
| Benching Height mm | 101 |
| Benching Slope 0/00 | 125 |
| Weight kg | 1893 kg |

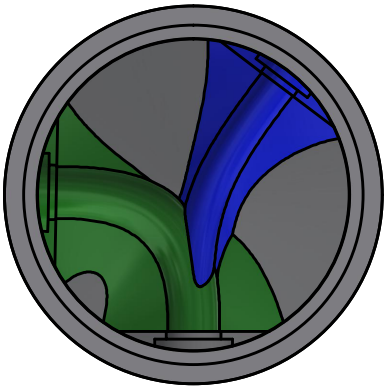

| | Main Inlet > | 1 | | | | |
|---|---|---|---|---|---|---|
| Outlet/Inlet | Outlet | Inlet 1 | Inlet 2 | Inlet 3 | Inlet 4 | Inlet 5 |
| Connections type | 200-8" PVC SDR 35 | 200-8" PVC SDR 35 | 150-6" PVC SDR 28 | | | |
| Gasket type | 12-08 PSX | 12-08 PSX | 10-06 PSX | | | |
| Dimension mm. | 201 | 201 | 150 | | | |
| Angle 360° | 0 | 91 | 217 | | | |
| Invert Level mm. | 0 | 60 | 60 | | | |
| 2. Invert Level mm. | | 60 | 60 | | | |
| Socket angle 0/00 | | | | | | |
| Channel Drop mm | | 60 | 60 | | | |
| Straight section mm | | 50 | 50 | | | |
| Note | | | | | | |

| | |
|---|---|
| Approved by. | |
| Control | |
| Date | |

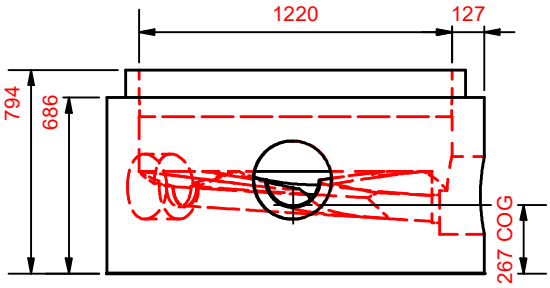


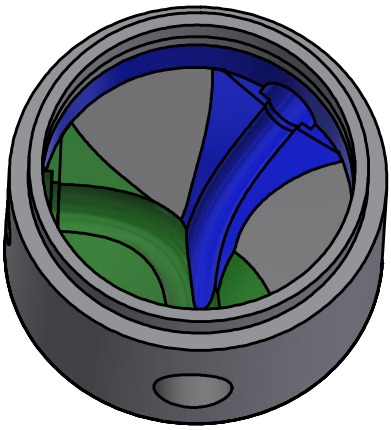

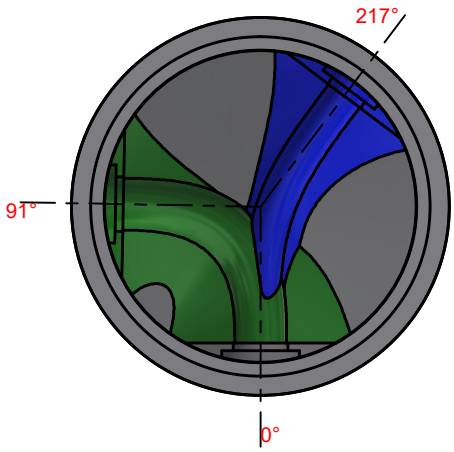

Hawkeye Pedershaab
Concrete Technologies Worldwide ™

M CON
PIPE & PRODUCTS INC

2691 Greenfield Road
Ayr, ON N0B 1E0 Canada

**Smartcast Basesection Designer.**

| | |
|---|---|
| Customer | J-AAR EXCAVATING LIMITED |
| Delivery address | PROPOSED RESIDENTIAL |
| Project No. | BUILDING TOWER A 15 |
| | CAPULET WALK |
| | |
| Basesection | 1220x127x686 2,25' |
| Order no. | 25990_SANMH03_A |
| Order Date | 14-10-2025 |
| Weight kg | 1893 kg |

| | |
|---|---|
| Center of gravity | 267 |
| EPS raw height | 407 |
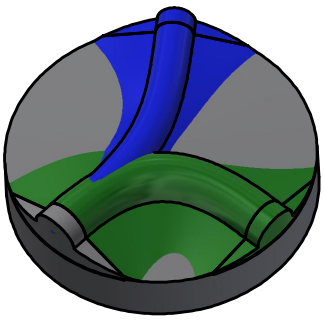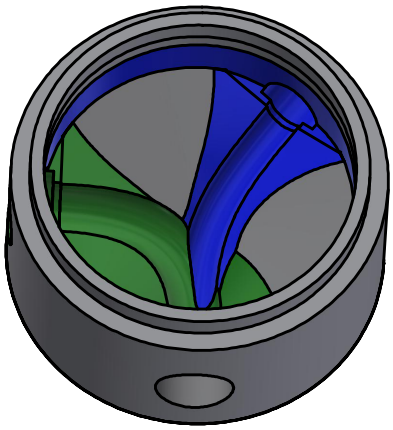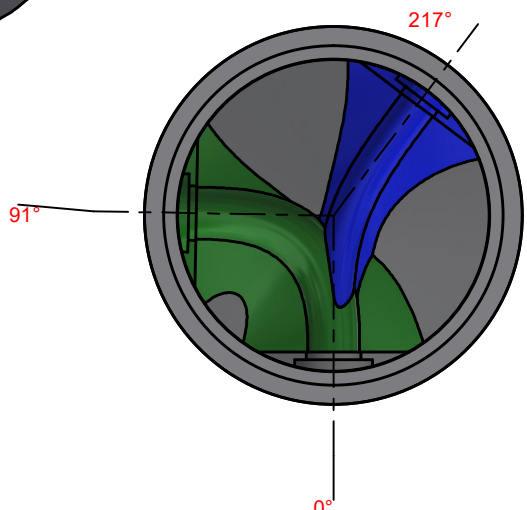
| | Main Inlet > | 1 | | | | |
|---|---|---|---|---|---|---|
| Outlet/Inlet | Outlet | Inlet 1 | Inlet 2 | Inlet 3 | Inlet 4 | Inlet 5 |
| Angle 360° | 0 | 91 | 217 | | | |
| Invert Level mm. | 0 | 60 | 60 | | | |
| Connections type | 200-8" PVC SDR 35 | 200-8" PVC SDR 35 | 150-6" PVC SDR 28 | | | |