Hawkeye Pedershaab
Concrete Technologies Worldwide ™

M CON
PIPE & PRODUCTS INC

2691 Greenfield Road
Ayr, ON N0B 1E0 Canada

Smartcast Basesection Designer. Order/Offer

Customer	NELLI CONSTRUCTION
Delivery address	
Project No.	289 BALLIOL ST
EPS Ø x H	1220 / 786,5

Order no.	26056_SANMH1A_A
Date.	07-01-2026
Order Date	07-01-2026
Made by	mcon@mcon.com

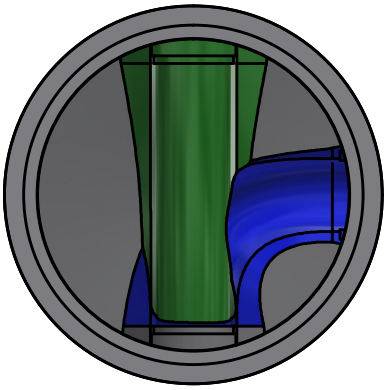

Mould	1220x127x1067 3,5'
Basesection	1220x127x1067 3,5'
Height mm	1175
Bottom inserts mm	152
Benching Height mm	299
Benching Slope 0/00	125
Weight kg	2707 kg

	Main Inlet >		1			
Outlet/Inlet	Outlet	Inlet 1	Inlet 2	Inlet 3	Inlet 4	Inlet 5
Connections type	300-12" PVC SDR 35	300-12" PVC SDR 35	250-10" PVC SDR 35			
Gasket type	16M PSX	16M PSX	14M PSX			
Dimension mm.	299	299	251			
Angle 360°	0	180	270			
Invert Level mm.	0		340			
2. Invert Level mm.			150			
Socket angle 0/00						
Channel Drop mm			150			
Straight section mm		50	50			
Note						

Approved by.	
Control	
Date	

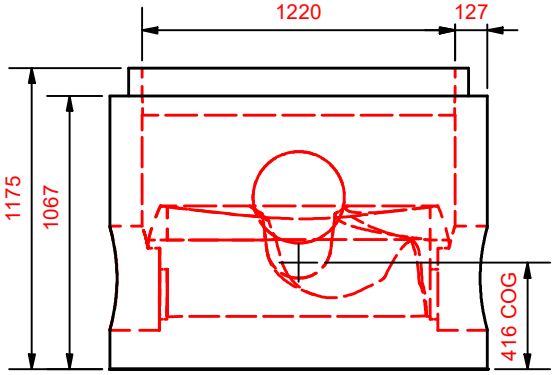

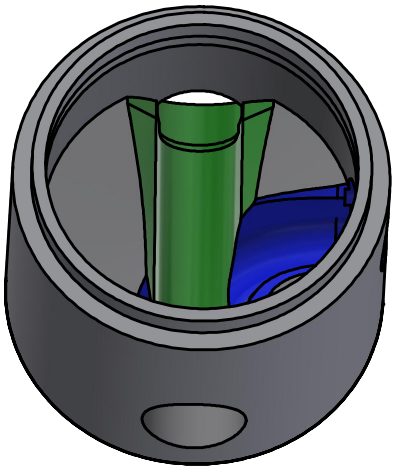

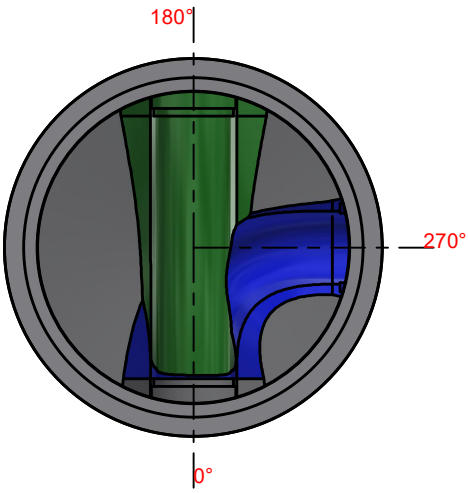

Hawkeye Pedershaab
Concrete Technologies Worldwide ™

M CON
PIPE & PRODUCTS INC

2691 Greenfield Road
Ayr, ON N0B 1E0 Canada

Smartcast Basesection Designer.

Customer	**NELLI CONSTRUCTION**
Delivery address	
Project No.	**289 BALLIOL ST**
Basesection	**1220x127x1067 3,5'**
Order no.	**26056_SANMH1A_A**
Order Date	**07-01-2026**
Weight kg	**2707 kg**

Center of gravity	416
EPS raw height	786,5
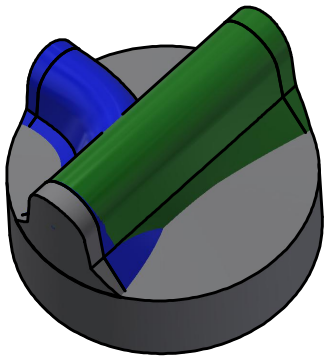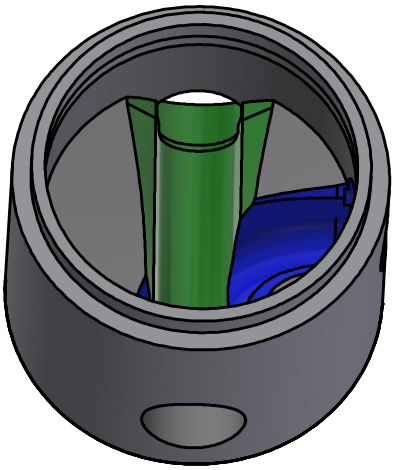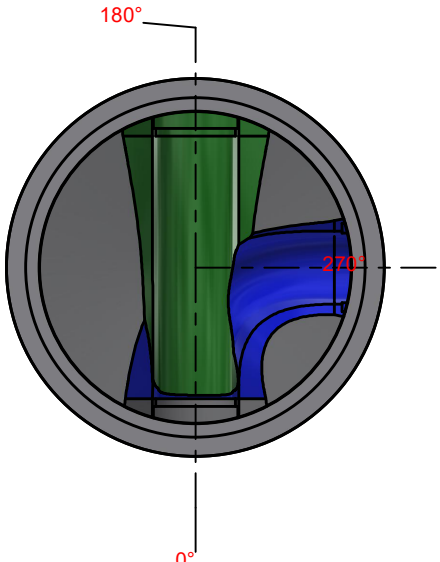
	Main Inlet >		1			
Outlet/Inlet	Outlet	Inlet 1	Inlet 2	Inlet 3	Inlet 4	Inlet 5
Angle 360°	0	180	270			
Invert Level mm.	0		340			
Connections type	300-12" PVC SDR 35	300-12" PVC SDR 35	250-10" PVC SDR 35