Hawkeye Pedershaab
Concrete Technologies Worldwide ™

M CON
PIPE & PRODUCTS INC

2691 Greenfield Road
Ayr, ON N0B 1E0 Canada

Smartcast Basesection Designer. Order/Offer

Customer	VIEWCON CONSTRUCTION LTD
Delivery address	
Project No.	NESBITT CRESCENT & VANIER AVENUE RECONSTRUCTION
EPS Ø x H	1220 407

Order no.	26115_SA7001_A
Date.	19-02-2026
Order Date	19-02-2026
Made by	mcon@mcon.com

Mould	1220x127x686 2,25'
Basesection	1220x127x686 2,25'
Height mm	794
Bottom inserts mm	152
Benching Height mm	101
Benching Slope 0/00	125
Weight kg	1933 kg

	Main Inlet >					
Outlet/Inlet	Outlet	Inlet 1	Inlet 2	Inlet 3	Inlet 4	Inlet 5
Connections type	200-8" PVC SDR 35 Cut Back					
Gasket type	12-08 PSX					
Dimension mm.	201					
Angle 360°	0					
Invert Level mm.	0					
2. Invert Level mm.						
Socket angle 0/00						
Channel Drop mm						
Straight section mm						
Note						

Approved by.	
Control	
Date	

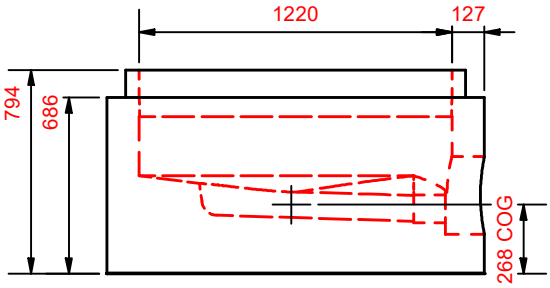

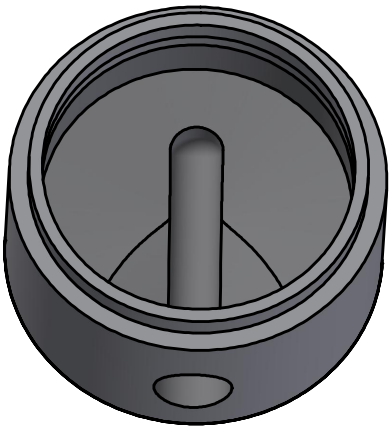

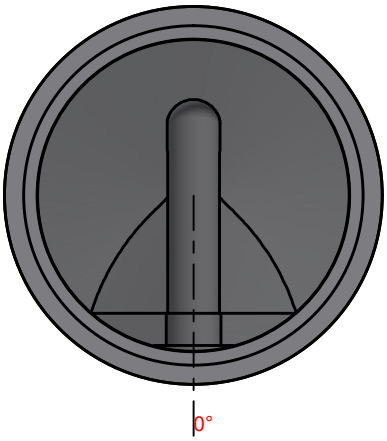

Hawkeye Pedershaab
Concrete Technologies Worldwide ™

M CON
PIPE & PRODUCTS INC

2691 Greenfield Road
Ayr, ON N0B 1E0 Canada

Smartcast Basesection Designer.

Customer	VIEWCON CONSTRUCTION LTD
Delivery address	NESBITT CRESCENT &
Project No.	VANIER AVENUE RECONSTRUCTION
Basesection	1220x127x686 2,25'
Order no.	26115_SA7001_A
Order Date	19-02-2026
Weight kg	1933 kg

Center of gravity	
EPS raw height	407
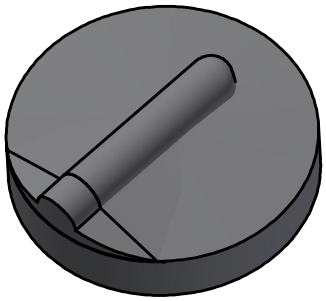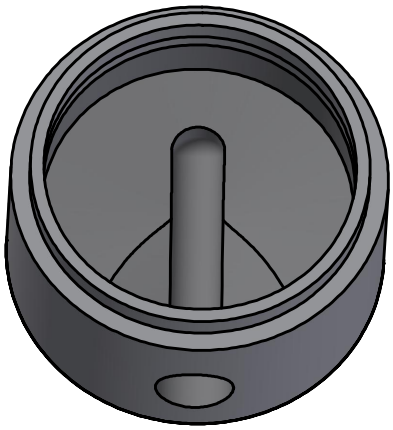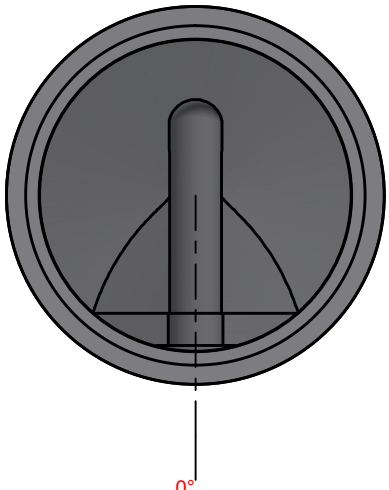
	Main Inlet >					
Outlet/Inlet	Outlet	Inlet 1	Inlet 2	Inlet 3	Inlet 4	Inlet 5
Angle 360°	0					
Invert Level mm.	0					
Connections type	200-8" PVC SDR 35 Cut Back