Hawkeye Pedershaab
Concrete Technologies Worldwide ™

M CON
PIPE & PRODUCTS INC

2691 Greenfield Road
Ayr, ON N0B 1E0 Canada

Smartcast Basesection Designer. Order/Offer

Customer	VIEWCON CONSTRUCTION LTD
Delivery address	
Project No.	NESBITT CRESCENT & VANIER AVENUE RECONSTRUCTION
EPS Ø x H	1220 / 483

Order no.	26115_SA7007_A
Date.	19-02-2026
Order Date	19-02-2026
Made by	mcon@mcon.com

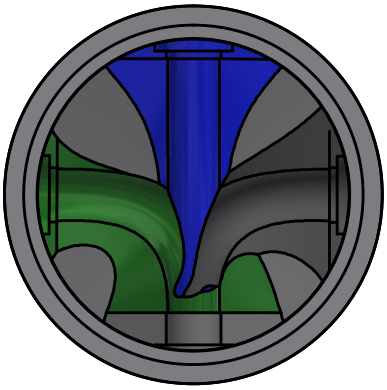

Mould	1220x127x762 2,5'
Basesection	1220x127x762 2,5'
Height mm	870
Bottom inserts mm	152
Benching Height mm	101
Benching Slope 0/00	125
Weight kg	1958 kg

	Main Inlet >	1				
Outlet/Inlet	Outlet	Inlet 1	Inlet 2	Inlet 3	Inlet 4	Inlet 5
Connections type	200-8" PVC SDR 35 Cut Back	200-8" PVC SDR 35	200-8" PVC SDR 35	200-8" PVC SDR 35		
Gasket type	12-08 PSX	12-08 PSX	12-08 PSX	12-08 PSX		
Dimension mm.	201	201	201	201		
Angle 360°	0	90	180	270		
Invert Level mm.	0	90	60	60		
2. Invert Level mm.		90	60	60		
Socket angle 0/00						
Channel Drop mm		90	60	60		
Straight section mm		50	50	50		
Note						

Approved by.	
Control	
Date	

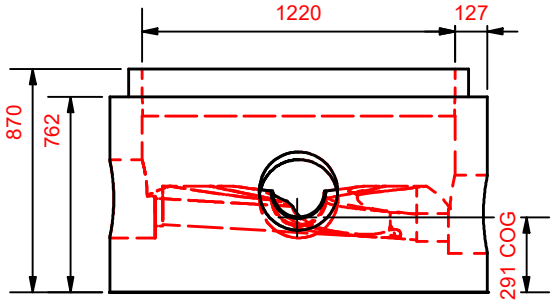

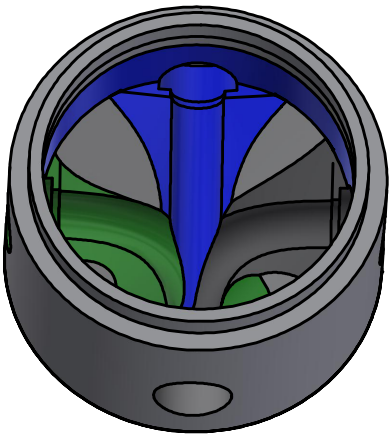

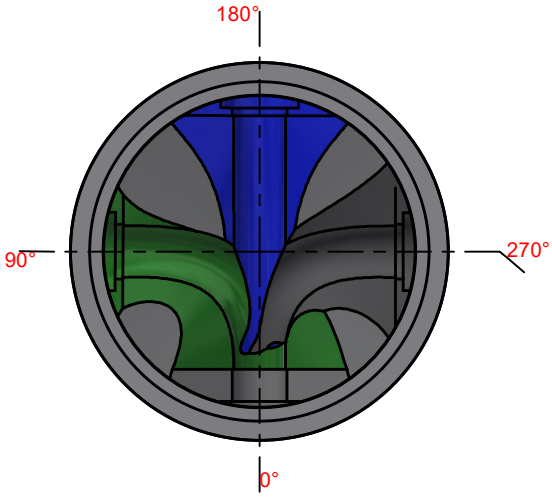

Hawkeye Pedershaab
Concrete Technologies Worldwide ™

M CON
PIPE & PRODUCTS INC

2691 Greenfield Road
Ayr, ON N0B 1E0 Canada

Smartcast Basesection Designer.

Customer	VIEWCON CONSTRUCTION LTD
Delivery address	NESBITT CRESCENT &
Project No.	VANIER AVENUE RECONSTRUCTION
Basesection	1220x127x762 2,5'
Order no.	26115_SA7007_A
Order Date	19-02-2026
Weight kg	1958 kg

Center of gravity	291
EPS raw height	483
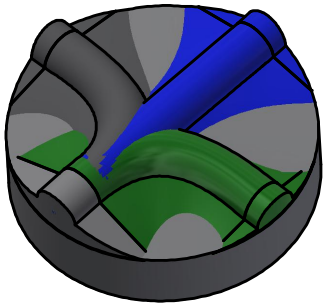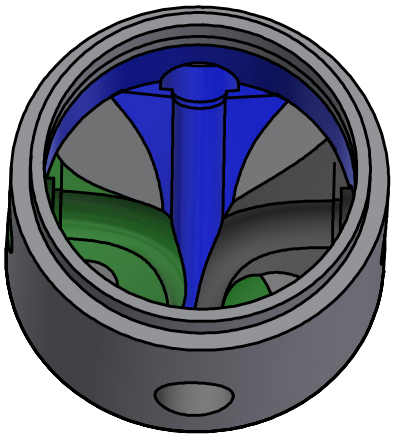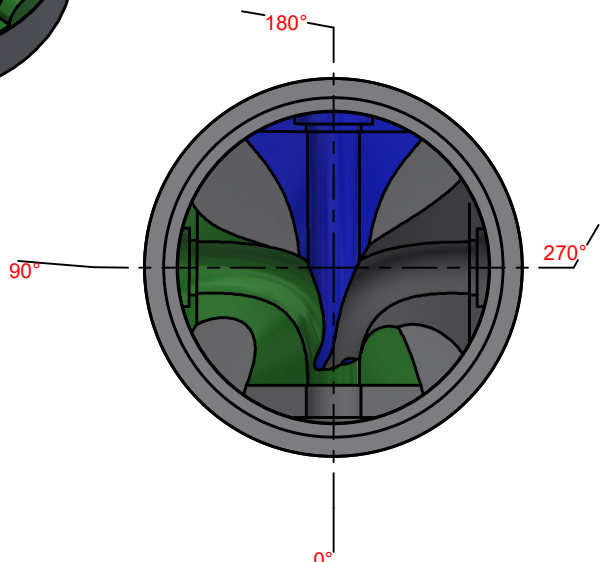
	Main Inlet >	1				
Outlet/Inlet	Outlet	Inlet 1	Inlet 2	Inlet 3	Inlet 4	Inlet 5
Angle 360°	0	90	180	270		
Invert Level mm.	0	90	60	60		
Connections type	200-8" PVC SDR 35 Cut Back	200-8" PVC SDR 35	200-8" PVC SDR 35	200-8" PVC SDR 35