Hawkeye Pedershaab
Concrete Technologies Worldwide ™

M CON
PIPE & PRODUCTS INC

2691 Greenfield Road
Ayr, ON N0B 1E0 Canada

Smartcast Basesection Designer. Order/Offer

Customer	VIEWCON CONSTRUCTION LTD
Delivery address	
Project No.	NESBITT CRESCENT & VANIER AVENUE RECONSTRUCTION
EPS Ø x H	1220 / 769

Order no.	26115_ST7262_A
Date.	23-02-2026
Order Date	23-02-2026
Made by	mcon@mcon.com

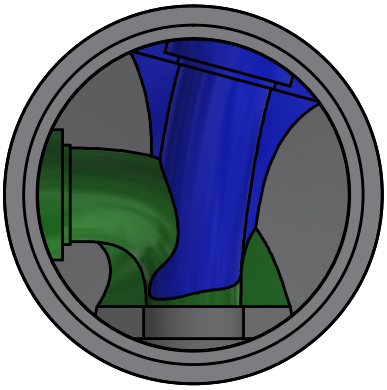

Mould	1220x127x1067 3,5'
Basesection	1220x127x1067 3,5'
Height mm	1175
Bottom inserts mm	152
Benching Height mm	183
Benching Slope 0/00	125
Weight kg	2410 kg

	Main Inlet >	1				
Outlet/Inlet	Outlet	Inlet 1	Inlet 2	Inlet 3	Inlet 4	Inlet 5
Connections type	375-15" PVC SDR 35 Cut Back	375-15" PVC SDR 35	375-15" PVC SDR 35			
Gasket type	20Y PSX	20Y PSX	20Y PSX			
Dimension mm.	366	366	366			
Angle 360°	0	90	195			
Invert Level mm.	0	100	60			
2. Invert Level mm.		100	60			
Socket angle 0/00						
Channel Drop mm		100	60			
Straight section mm		50	50			
Note						

Approved by.	
Control	
Date	

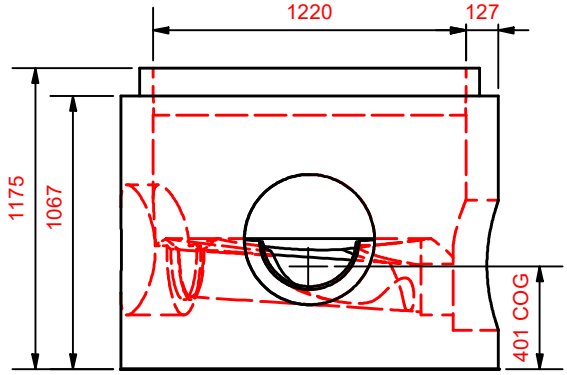

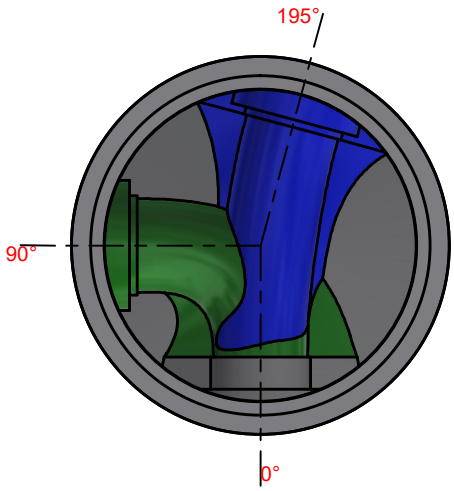

Hawkeye Pedershaab
Concrete Technologies Worldwide ™

M CON
PIPE & PRODUCTS INC

2691 Greenfield Road
Ayr, ON N0B 1E0 Canada

Smartcast Basesection Designer.

Customer	VIEWCON CONSTRUCTION LTD
Delivery address	NESBITT CRESCENT &
Project No.	VANIER AVENUE RECONSTRUCTION
Basesection	1220x127x1067 3,5'
Order no.	26115_ST7262_A
Order Date	23-02-2026
Weight kg	2410 kg

Center of gravity	401
EPS raw height	769
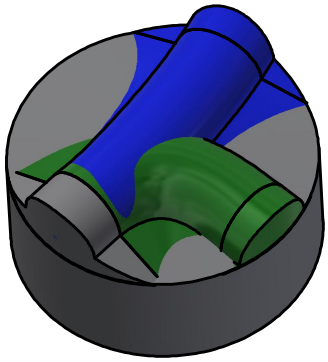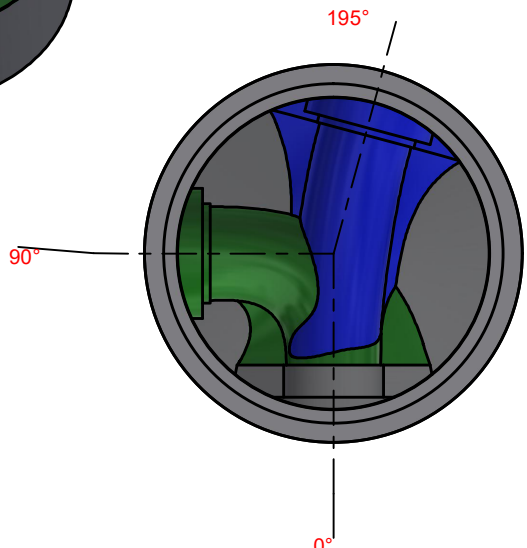
	Main Inlet >	1				
Outlet/Inlet	Outlet	Inlet 1	Inlet 2	Inlet 3	Inlet 4	Inlet 5
Angle 360°	0	90	195			
Invert Level mm.	0	100	60			
Connections type	375-15" PVC SDR 35 Cut Back	375-15" PVC SDR 35	375-15" PVC SDR 35