Hawkeye Pedershaab
Concrete Technologies Worldwide ™

M CON
PIPE & PRODUCTS INC

2691 Greenfield Road
Ayr, ON N0B 1E0 Canada

Smartcast Basesection Designer. Order/Offer

Customer	VIEWCON CONSTRUCTION LTD
Delivery address	
Project No.	NESBITT CRESCENT & VANIER AVENUE RECONSTRUCTION
EPS Ø x H	1220 / 634,5

Order no.	26115_ST7264_A
Date.	23-02-2026
Order Date	23-02-2026
Made by	mcon@mcon.com

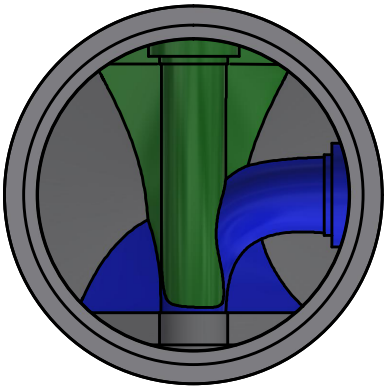

Mould	1220x127x914 3'
Basesection	1220x127x914 3'
Height mm	1022
Bottom inserts mm	152
Benching Height mm	126
Benching Slope 0/00	125
Weight kg	2188 kg

	Main Inlet >		1			
Outlet/Inlet	Outlet	Inlet 1	Inlet 2	Inlet 3	Inlet 4	Inlet 5
Connections type	250-10" PVC SDR 35 Cut Back	250-10" PVC SDR 35	300-12" PVC SDR 35			
Gasket type	14M PSX	14M PSX	16M PSX			
Dimension mm.	251	251	299			
Angle 360°	0	180	270			
Invert Level mm.	0	10	100			
2. Invert Level mm.		10	100			
Socket angle 0/00						
Channel Drop mm		10	100			
Straight section mm		50	50			
Note						

Approved by.	
Control	
Date	

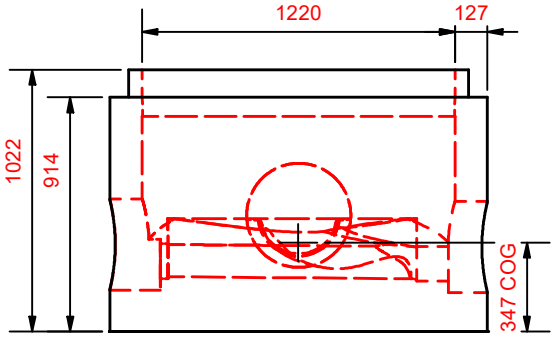

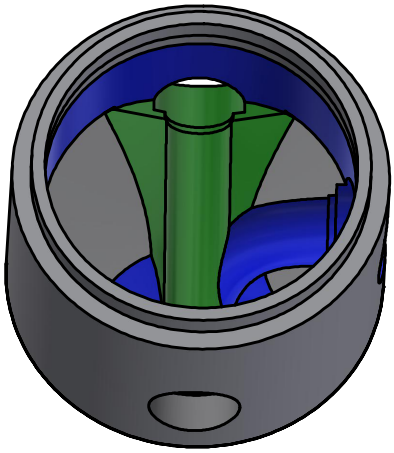

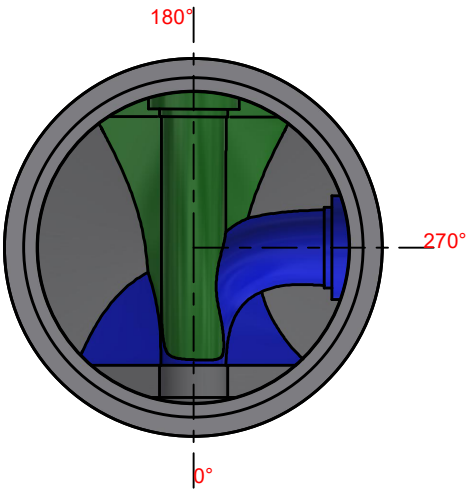

Hawkeye Pedershaab
Concrete Technologies Worldwide ™

M CON
PIPE & PRODUCTS INC

2691 Greenfield Road
Ayr, ON N0B 1E0 Canada

Smartcast Basesection Designer.

Customer	VIEWCON CONSTRUCTION LTD
Delivery address	NESBITT CRESCENT &
Project No.	VANIER AVENUE RECONSTRUCTION
Basesection	1220x127x914 3'
Order no.	26115_ST7264_A
Order Date	23-02-2026
Weight kg	2188 kg

Center of gravity	347
EPS raw height	634,5
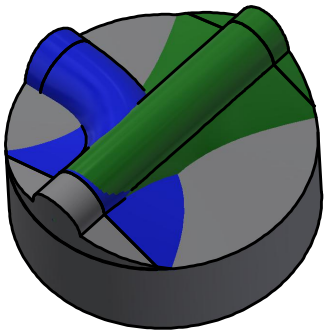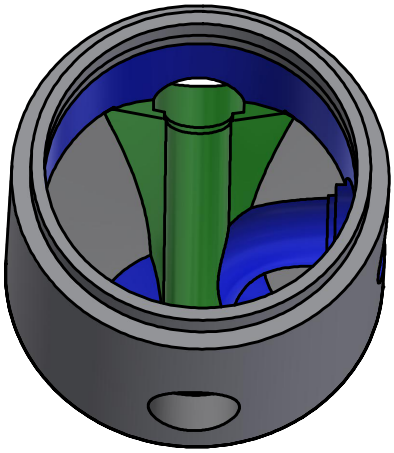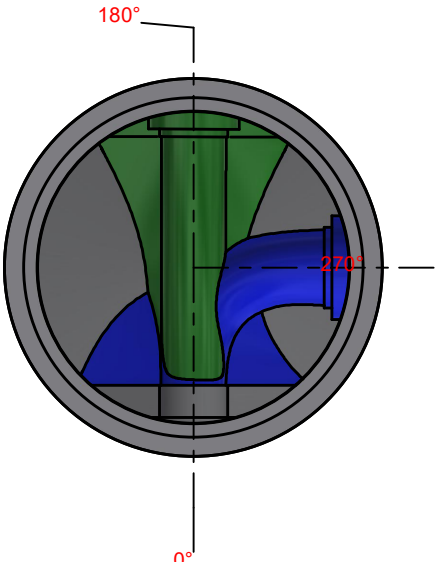
	Main Inlet >		1			
Outlet/Inlet	Outlet	Inlet 1	Inlet 2	Inlet 3	Inlet 4	Inlet 5
Angle 360°	0	180	270			
Invert Level mm.	0	10	100			
Connections type	250-10" PVC SDR 35 Cut Back	250-10" PVC SDR 35	300-12" PVC SDR 35