Elamebait
Nur Imam Prayogo
Designed By
F. 19V 1A1
Elamebait
Nur Imam Prayogo
Designed By
F. 19V 1A1
FB2 Ver. 7
FB2 Ver. 7
FB2 Ver. 7
FB2 Ver. 7

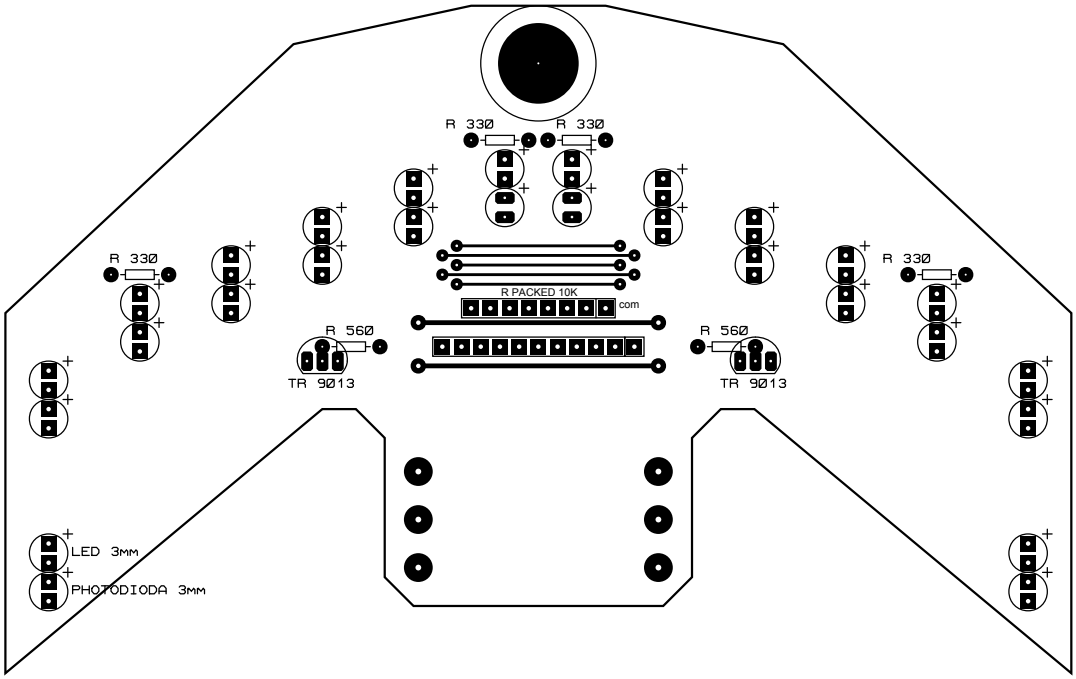
R 330
R 330
R 330
R 330
R PACKED 10K
com
R 560
R 560
TR 9013
TR 9013
LED 3mm
PHOTODIODA 3mm

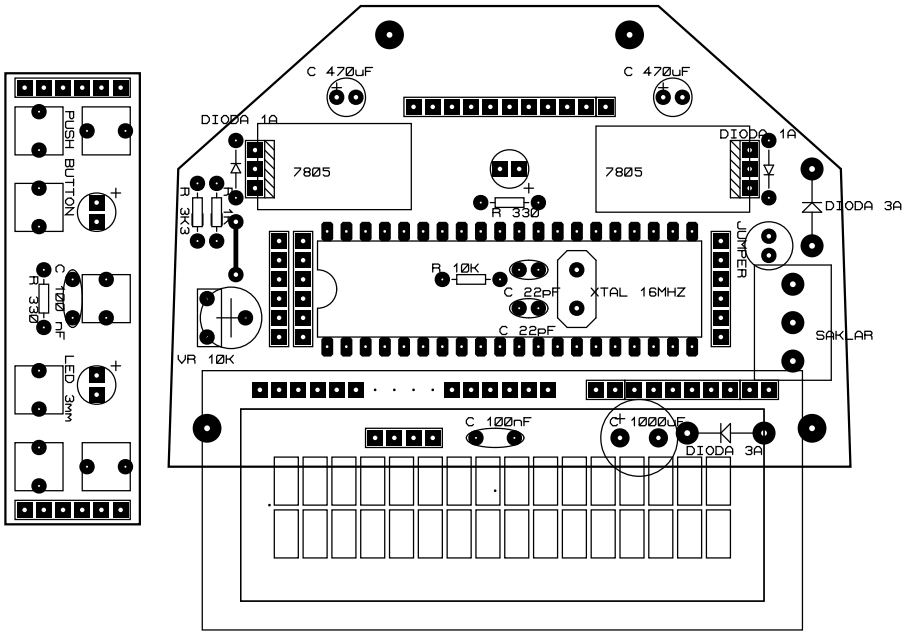
PUSH BUTTON
R 330
C 100 nF
LED 3mm
C 470uF
C 470uF
DIODA 1A
DIODA 1A
7805
7805
R 330
R 3K3
R 3K3
DIODA 3A
JUMPER
R 10K
C 22pF
XTAL 16MHZ
C 22pF
SAKLAR
VR 10K
C 100nF
C 1000uF
DIODA 3A

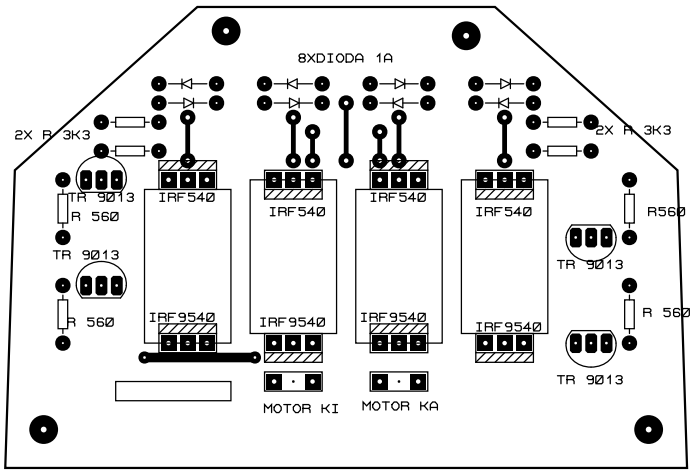
8XDIODA 1A
2X R 3K3
2X R 3K3
TR 9013
R 560
TR 9013
R 560
IRF540
IRF540
IRF540
IRF540
IRF9540
IRF9540
IRF9540
IRF9540
R560
TR 9013
R 560
TR 9013
MOTOR KI
MOTOR KA