Weekly Report

- Network-on-Chip Design
  - Network Interface
  - Router
  - Parameter
  - Virtual Channel vs Physical Channel Trad-off
- NoC Fundamentals
  - 研讀 On-Chip Networks Second Edition 並整理成知識庫
    - https://yue831107.github.io/noc-knowledge-base/
  - 蘇黎世大學計組課程
    - https://www.youtube.com/@OnurMutluLectures

工業技術研究院
Industrial Technology Research Institute

©工業技術研究院 權利所有。

Channel Trade-off

Arteris 在 2010 年 ARM Technology Conference

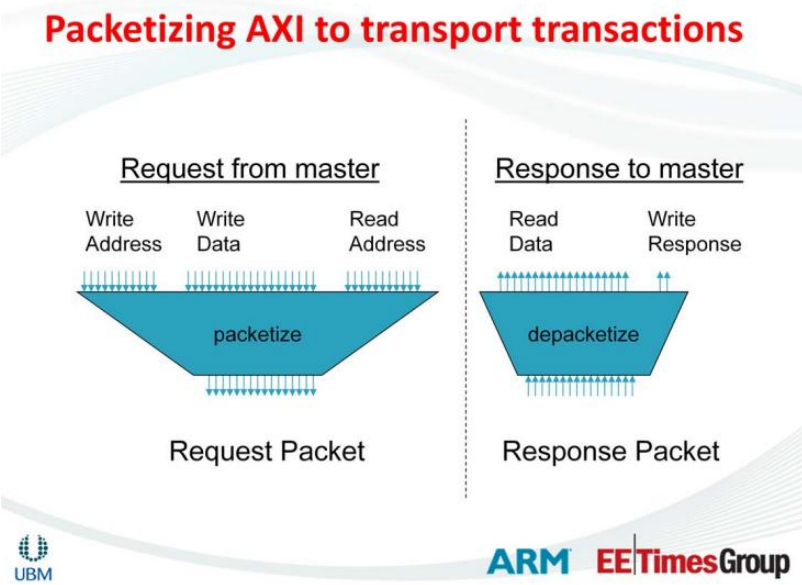

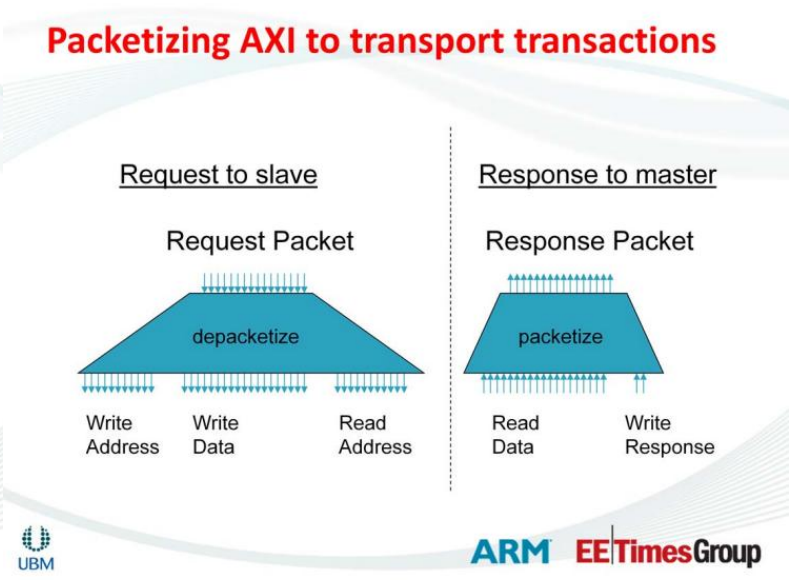

NoC 的設計考量

- NoC 用於 **大型系統整合**，node 數量 10~100+
- **Scalability > Peak Throughput**
- **Area/Power budget** 隨 node 數量線性增長
- 每多一條 channel → router port 倍增 → crossbar 面積 $O(N^2)$

2-Channel 的優勢

Parameter	Description
PHY 適配	易於對接 SerDes、UCIe 等 off-chip PHY
Die-to-Die	適合 chiplet 互連，減少 I/O pin count
面積效率	Router crossbar 最小化
頻寬彈性	可透過 link width 調整 throughput

Agilex™ 7 M-Series FPGA Network-on-Chip (NoC)

Transaction Type	Direction	Link Count	Link Width (bit)	-1, -2 Speed Grade NoC Operating Frequency (GHz)	-1, -2 Speed Grade Max Bandwidth (GB/
Request (AW, W, AR)	Left-to-Right	2	512	1.4	179.2
	Right-to-Left	2	512	1.4	179.2
Response (R, B)	Left-to-Right	2	512	1.4	179.2
	Right-to-Left	2	512	1.4	179.2

工業技術研究院
Industrial Technology Research Institute

©工業技術研究院 權利所有。

Reorder Buffer Size

- **Reorder Buffer & Reorder Table**
  - Responses from **same AXI ID** arrive out-of-order (due to different slave latencies)
  - Local master does **not support interleaved responses**
  - AXI protocol: same-ID responses must follow request order
  - **Reorder Table Sizing (Per-ID FIFO)**
    - Count = NUM_USED_ID (= 2^InIdWidth)
    - Depth = MAX_OUTSTANDING_PER_ID
  - **Reorder Buffer Sizing (Shared SRAM by all IDs)**
    - B Channel = MAX_OUTSTANDING
    - R Channel = MAX_OUTSTANDING × MAX_BURST_LENGTH

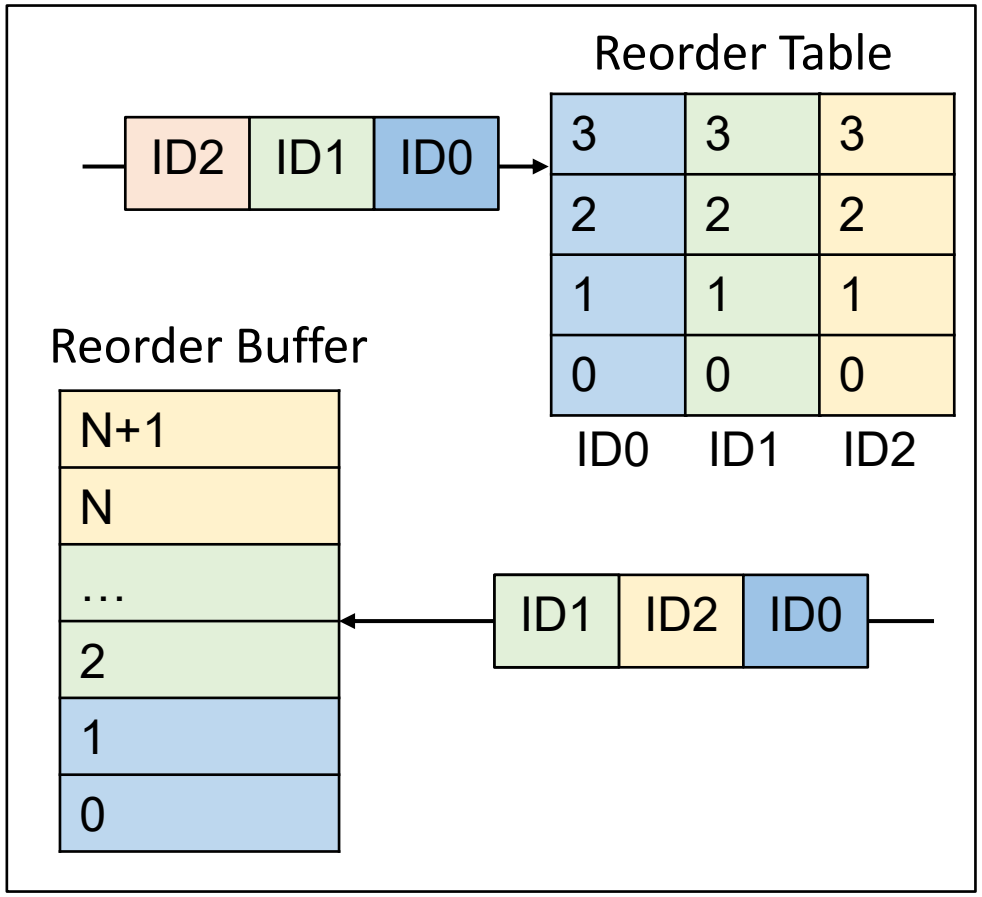

工業技術研究院
Industrial Technology Research Institute
©工業技術研究院 權利所有。

NI Meta Buffer Sizing

Parameter	Implementation	Description
MaxUniqueIds = 1	Shared FIFO	All IDs share one FIFO
MaxUniqueIds > 1	Per-ID Queue	Each ID has independent tracking

- **Meta Buffer**
  - Located in **Subordinate Port** of Network Interface
  - Stores request metadata (src_id, axi_id, rob_idx) until response returns
  - Required for **ID remapping** and **response routing**
  - **Shared FIFO**
    - FIFO depth = MAX_OUTSTANDING
    - All outgoing requests use fixed ID (serialized)
    - Response order follows FIFO (request order)
  - **Per-ID Queue**
    - Total capacity = MAX_OUTSTANDING (shared across all IDs)
    - Each AXI ID maintains independent tracking chain
    - Out-of-order response supported (different IDs)

MaxUniqueIds = 1: Transactions with different IDs are forced to be in-order.

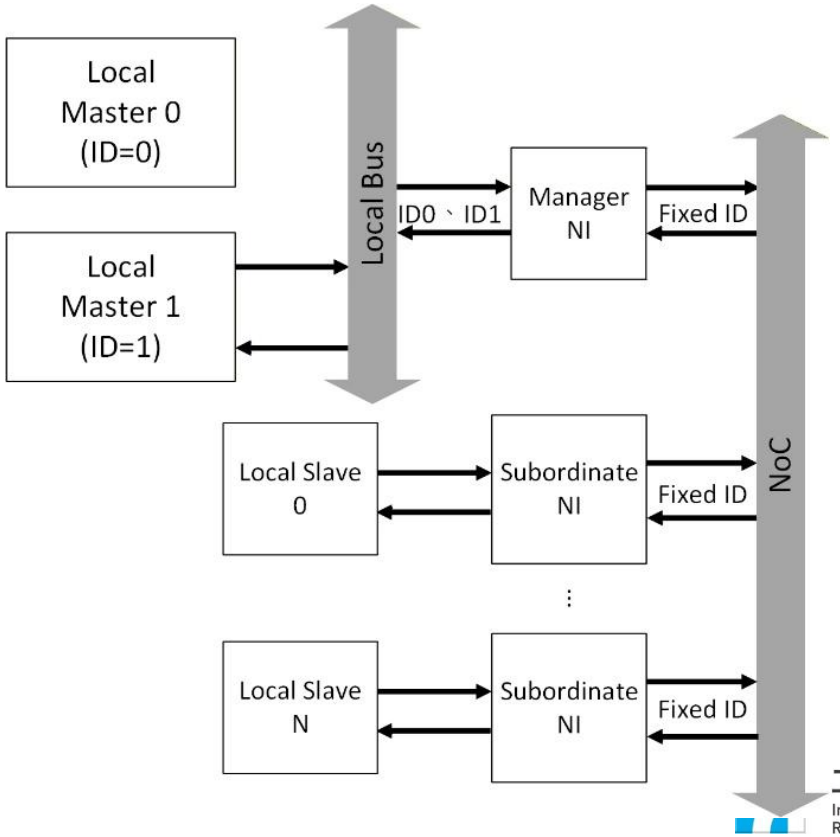

工業技術研究院
Industrial Technology Research Institute

©工業技術研究院 權利所有。

Credit-Based Flow Control

Latency-Driven Buffer Sizing / Sender-Managed Protocol

- **Step**
  1. Node 0 sends flit → consumes 1 credit
  2. Flit arrives at Node 1 → occupies buffer
  3. Node 1 frees buffer slot → sends credit back
  4. Node 0 receives credit → refills counter
  5. If credit = 0 → **STALL** (Sender Halts)
- **Timing Analysis: Buffer Turnaround Time**
  - **Buffer Depth ≥ T_data + T_credit + T_pipeline**

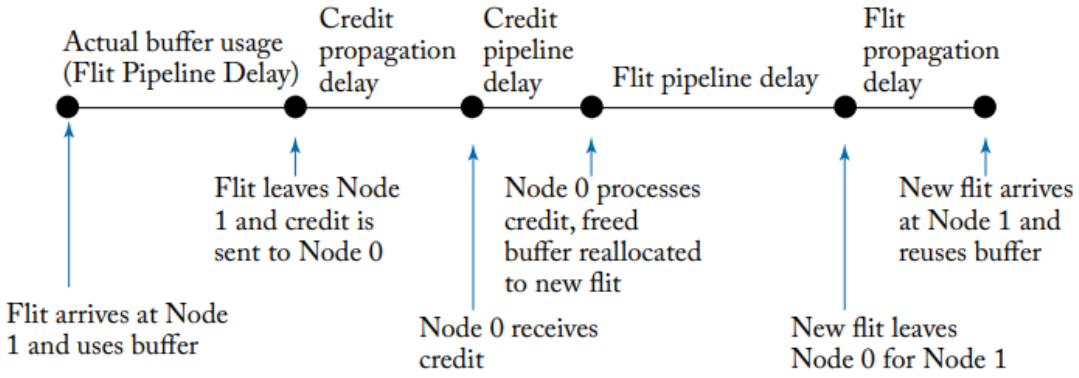

Symbol	Description
T_data	Flit propagation delay (Node 0 → Node 1)
T_credit	Credit propagation delay (Node 1 → Node 0)
T_pipeline	Router internal processing delay

Buffer Sizing For Turnaround Time

連續 flit 重新使用同一 buffer slot 的最小等待時間

- Turnaround time 過長 : Buffer utilization 降低，throughput 下降
- Buffer depth < turnaround time : Link stall，即使無 port contention

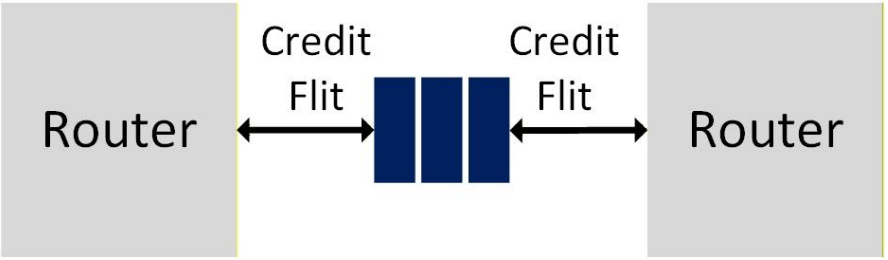

工業技術研究院
Industrial Technology Research Institute

©工業技術研究院 權利所有。

Valid-Ready Flow Control

Throughput & Margin Sizing / Receiver-Managed Protocol

- **Step**
  1. Node 0 asserts valid with data
  2. Node 1 asserts ready if buffer available
  3. Transfer occurs when valid & ready = 1
  4. Node 1 deasserts ready when buffer full
- **Timing Analysis: Buffer Turnaround Time**
  - Buffer Depth ≥ N_fwd + N_bwd + N_proc

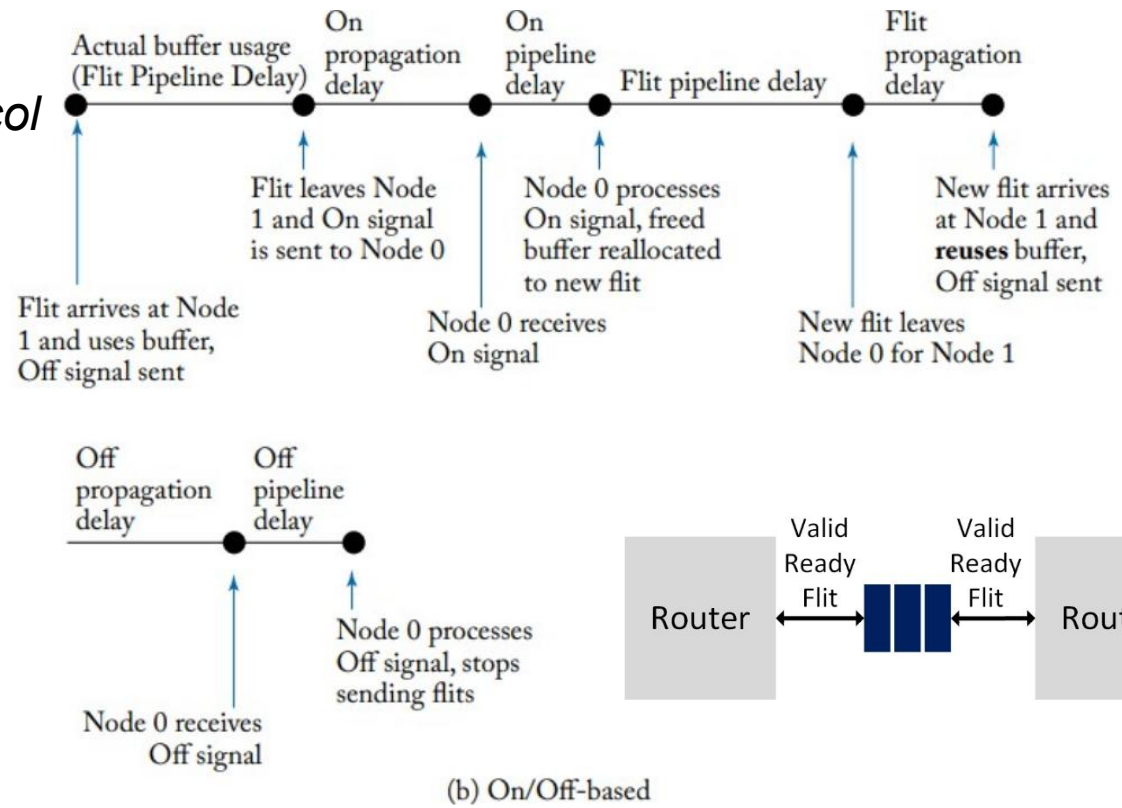

(b) On/Off-based

Calculated Thresholds

Thresholds Type	Threshold Formulas
High_Threshold (Stop Inflow)	Buffer_Depth − N_fwd
Low_Threshold (Resume Inflow)	High_Threshold − 1

Variable definitions:

- N_fwd: Forward path stages (Sender → Receiver)
- N_bwd: Backward path stages (Ready → Sender)
- N_proc: Internal processing (Read → Ready Logic)

工業技術研究院
Industrial Technology Research Institute

©工業技術研究院 權利所有。

Network Interface Architecture

- **Manager Port**
  - 接收 Local AXI Master 發出的Request
  - 將 AXI Transaction 打包成 flit發送到 NoC
  - 接收 NoC 的Response，返回給Local Master
  - 使用 Reorder Buffer (RoB) 重排亂序返回的 Response，確保符合 AXI spec
- **Subordinate Port**
  - 接收 NoC 的Request
  - 解包 flit 並轉發給 Local AXI Slave
  - 將 Local Slave 的 Response打包成 flit，發回 NoC
  - 使用 Meta Buffer 追 Request ID，確保Response 正確回到 Request node

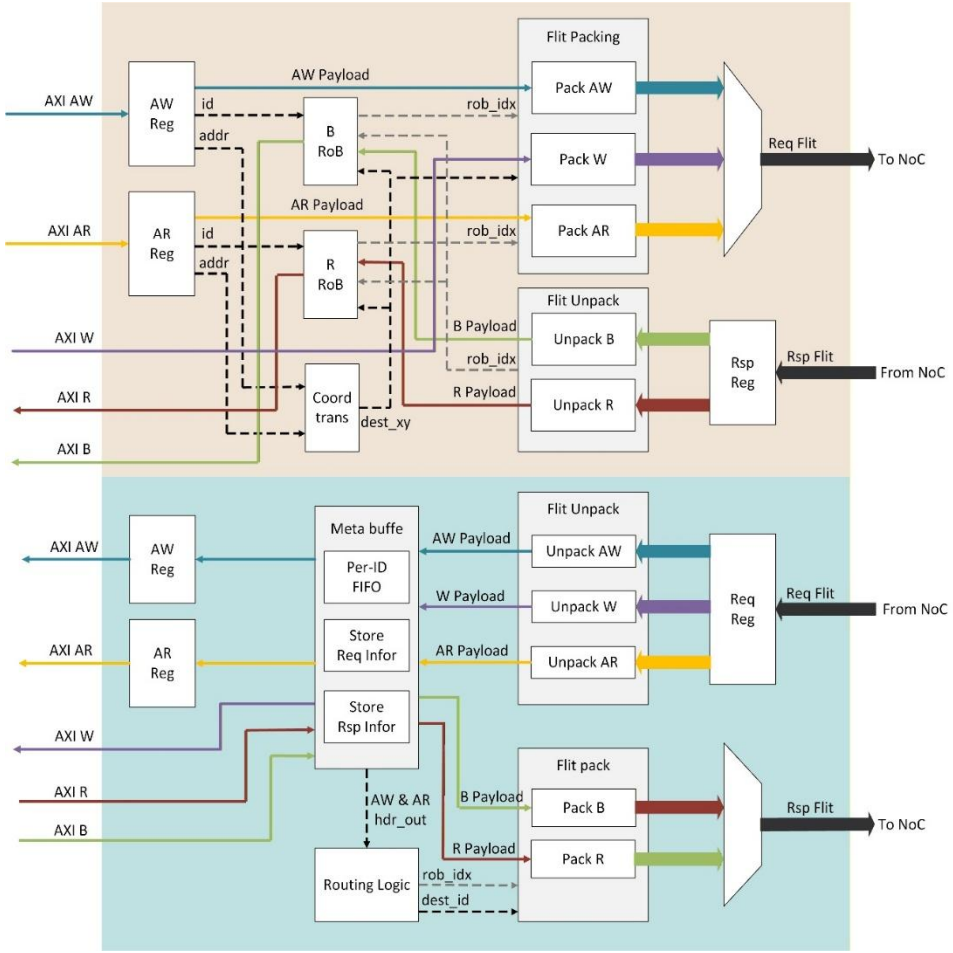

工業技術研究院
Industrial Technology Research Institute
©工業技術研究院 權利所有。

Managing the ordering requirement of AXI

Manager Port Data Flow

1. Local Master → AXI req → Reorder Table (分配rob_idx識別同ID Request) → Encode → NoC
2. NoC → Decode → Reorder Buffer (用 rob_idx 處理Out-of-Order) → AXI rsp → Local Master

Subordinate Port Data Flow

1. NoC → Decode (存入src id, rob idx)→ AXI req → Local Slave
2. Local Slave → AXI rsp (讀取 Meta FIFO src id, rob idx) → Encode → NoC

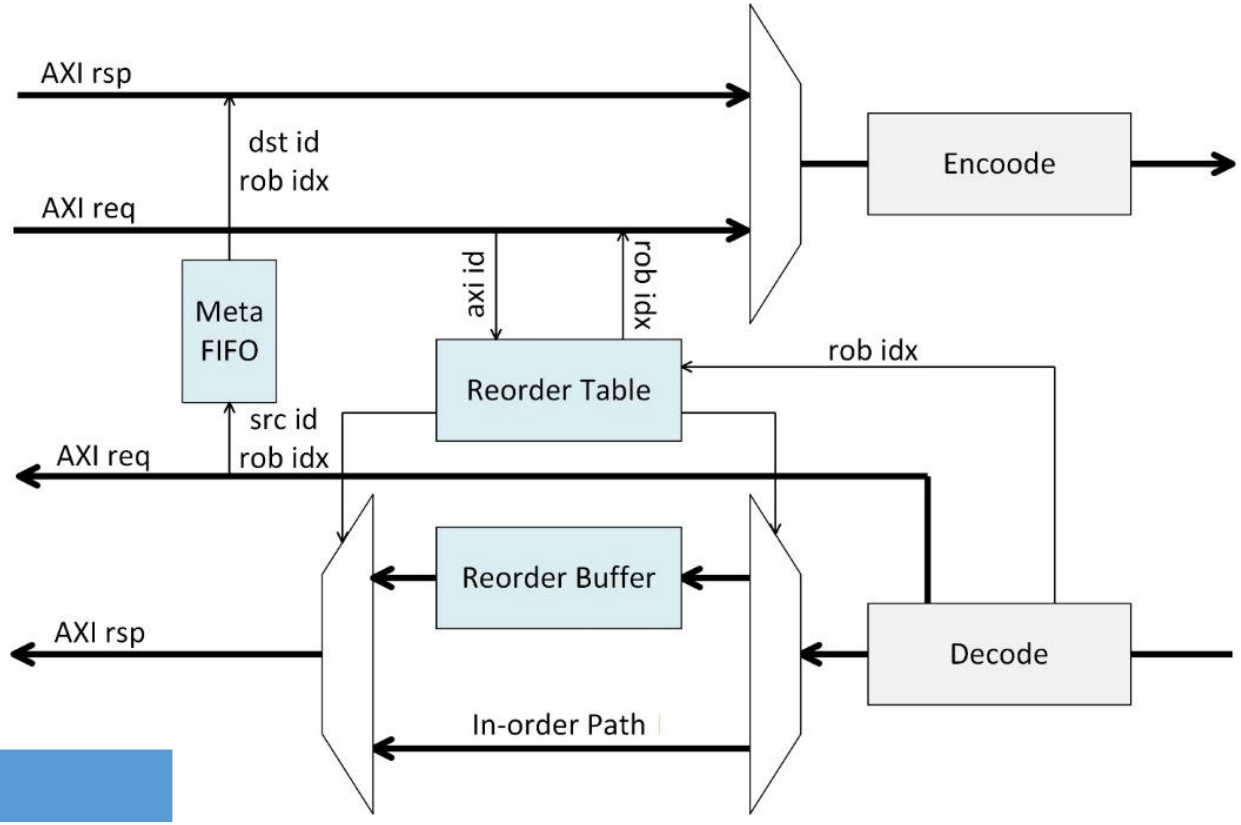

Component	Path	Function
Reorder Table	Manager	分配 rob idx，追蹤未完成交易
Reorder Buffer	Manager	亂序返回的Response 按 rob idx 重排
Meta FIFO	Subordinate	暫存 Request src_id, rob_idx

工業技術研究院
Industrial Technology Research Institute

©工業技術研究院 權利所有。

Header Format

Flit Header

Bit	Field	Width	Description
[3:0]	qos	4	QoS priority (Arbitration first)
[6:4]	axi_ch	3	AXI Channel type (Opcode)
[11:7]	dst_id	5	Destination node {x[2:0], y[1:0]}
[16:12]	src_id	5	Source node {x[2:0], y[1:0]}
[17]	last	1	Packet end marker (last flit)
[18]	rob_req	1	Reorder Buffer request flag
[23:19]	rob_idx	5	RoB index (supports 32 entries)
[31:24]	hdr_rsvd	8	Reserved (future expansion)

Arbitration → Opcode → Routing → Flit Control → Flow Control → Reserved

Field Ordering Rationale

Order	Category	Field	Router Processing
1	Arbitration	qos	Earliest needed, determines flit priority
2	Opcode	axi_ch	Determines flit type and processing path
3	Routing	dst_id, src_id	Determines output port
4	Flit Control	last	Required for wormhole switching
5	Flow Control	rob_req, rob_idx	Destination processing, placed last

工業技術研究院
Industrial Technology Research Institute

©工業技術研究院 權利所有。

Packet Format

AW Flit

Bit	Field	Width	Description
[7:0]	awid	8	Transaction ID
[39:8]	awaddr	32	Write address
[47:40]	awlen	8	Burst length (0-255)
[50:48]	awsize	3	Burst size
[52:51]	awburst	2	Burst type
[56:53]	awcache	4	Cache attributes
[57]	awlock	1	Exclusive access

W Flit

Bit	Field	Width	Description
[0]	wlast	1	Last beat marker
[256:1]	wdata	256	Write data
[288:257]	wstrb	32	Write strobe
[303:289]	rsvd	15	Reserved (future expansion)

B Flit

Bit	Field	Width	Description
[7:0]	bid	8	Write transaction ID
[9:8]	bresp	2	Write response status

工業技術研究院
Industrial Technology Research Institute

©工業技術研究院 權利所有。

Packet Format

AR Flit

Bit	Field	Width	Description
[7:0]	arid	8	Transaction ID
[39:8]	araddr	32	Read address
[47:40]	arlen	8	Burst length (0-255)
[50:48]	arsize	3	Burst size
[52:51]	arburst	2	Burst type
[56:53]	arcache	4	Cache attributes
[57]	arlock	1	Exclusive access

R Flit

Bit	Field	Width	Description
[7:0]	rid	8	Read transaction ID
[9:8]	rresp	2	Read response status
[10]	rlast	1	Last beat marker
[266:11]	rdata	256	Read data
[279:267]	rsvd	13	Reserved (future expansion)

工業技術研究院
Industrial Technology Research Institute

©工業技術研究院 權利所有。

Channel Flit Sizes

- **Request Channel Union (336 bits)**
- **Response Channel Union (312 bits)**

Channel Flit Sizes

Channel	Header	Payload	Flit Total
AW	32	58	90 bits
W	32	304	**336 bits**
AR	32	58	90 bits
B	32	10	42 bits
R	32	280	**312 bits**

Option	Req Flit	Rsp Flit	Header	W rsvd	R rsvd	Description
A (current)	336	312	32	15	13	Minimal increment
B	352	320	32	31	21	Balanced, Rsp aligned to 40 bytes
C	384	320	32	63	21	Req aligned to 48 bytes
D	384	384	32	63	85	Symmetric design, max expansion

工業技術研究院
Industrial Technology Research Institute

©工業技術研究院 權利所有。

Request flit format

REQFLIT[(R-1):0] format		
Field	**Field width**	**Comments**
QoS	4	-
TgtID	7 to 16	Width determined by NodeID_Width
SrcID	7 to 16	Width determined by NodeID_Width
TxnID	12	-
ReturnNID	7 to 16	Used for DMT
StashNID		Used in Stash transactions
{(NodeID_Width - 7)'b0,		MBZ
DataTarget[6:0]}		Used to aid data placement in system cache hierarchy
StashNIDValid	1	Used in Stash transactions
Endian		Used in Atomic transactions
Deep		Used in CleanSharedPersist* transactions
PrefetchTgtHint		Hint for Chip-to-Chip receivers
ReturnTxnID[11:0]	12	Used for DMT
{6'b0,		MBZ
StashLPIDValid,		Used in Stash transactions
StashLPID[4:0]}		Used in Stash transactions
Opcode	7	-
MultiReq	1	Used in multi-request transactions.
NumReq	6	Field determined by the MultiReq value
{3'b0, Size}		
Addr	RAW = 44 to 52	Width determined by Req_Addr_Width (RAW)

REQFLIT[(R-1):0] format		
Field	**Field width**	**Comments**
Total	(93 + RAW + Y + M + PB + S + Max(E,R)) to (120 + RAW + Y + M + PB + S + Max(E,R))	

REQFLIT[(R-1):0] format		
Field	**Field width**	**Comments**
PAS	3	-
LikelyShared	1	-
AllowRetry	1	-
Order	2	-
PCrdType	4	-
MemAttr	4	-
SnpAttr	1	-
DoDWT		Used for DWT
PGroupID[7:0]	8	Used in PCMO transactions
StashGroupID[7:0]		Used in the StashOnceSep transaction
TagGroupID[7:0]		Used for Memory Tagging
{3'b0,		MBZ
LPID[4:0]}		-
Excl	1	Used in Exclusive transactions
SnoopMe		Used in Atomic transactions
CAH		Used in CopyBack Write transactions
ExpCompAck	1	-
TagOp	2	-
TraceTag	1	-
MPAM	M = 0	No MPAM bus
	M = 12, 15	-
PBHA	PB = 0	No PBHA bus
	PB = 4	-
MECID	E = 0	No MECID bus
	E = 16	Used for RME-MEC
StreamID	R = 0	No StreamID bus
	R = 16	Used for RME-CDA
		Common field is Max(E,R)
SecSID1	S = 0	No SecSID1 bit
	S = 1	Used for RME-CDA
RSVDC	Y = 0	No RSVDC bus
	Y = 4, 8, 12, 16, 24, 32	Width determined by Req_RSVDC_Width.

工業技術研究院
Industrial Technology Research Institute

©工業技術研究院 權利所有。

Response flit

RSPFLIT[(T-1):0] format		
Field	**Field width**	**Comments**
QoS	4	-
TgtID	7 to 16	Width determined by NodeID_Width
SrcID	7 to 16	Width determined by NodeID_Width
TxnID	12	-
Opcode	5	-
RespErr	2	-
Resp	3	-
FwdState[2:0]	3	Used for DCT
{2'b0,		MBZ
DataPull}		Used in Stash transactions
CBusy	3	-
DBID[11:0]	12	-
{4'b0,		MBZ
PGroupID[7:0]}		Used in Persistent CMO transactions
{4'b0,		MBZ
StashGroupID[7:0]}		Used in Stash transactions
{4'b0,		MBZ
TagGroupID[7:0]}		Used for Memory Tagging
PCrdType	4	-

RSPFLIT[(T-1):0] format		
Field	**Field width**	**Comments**
TagOp	2	-
TraceTag	1	-
CacheLineID	6	Used in multi-request transactions
Total	T = 71 to 89	

工業技術研究院
Industrial Technology Research Institute

©工業技術研究院 權利所有。

Snoop flit

SNPFLIT[(S-1):0] format		
Field	**Field width**	**Comments**
QoS	4	-
SrcID	7 to 16	Width determined by NodeID_Width
TxnID	12	-
FwdNID	7 to 16	Width determined by NodeID_Width
{(NodeID_Width - 4)'0,		
PBHA[3:0]}		
FwdTxnID[11:0]	12	Used for DCT
{6'b0,		MBZ
StashLPIDValid,		Used in Stash transactions
StashLPID[4:0]}		Used in Stash transactions
{4'b0,		MBZ
VMIDExt[7:0]}		Used in DVM transactions
Opcode	5	-
Addr	SAW = 41 to 49	Req_Addr_Width - 3
PAS	3	-
DoNotGoToSD	1	-
RetToSrc	1	-
TraceTag	1	-
MPAM	M = 0	No MPAM bus

SNPFLIT[(S-1):0] format		
Field	**Field width**	**Comments**
	M = 12, 15	-
MECID	E = 0	No MECID bus
	E = 16	Used for RME-MEC
Total	S = (53 + SAW + M + E) to (71 + SAW + M + E)	

工業技術研究院
Industrial Technology Research Institute

©工業技術研究院 權利所有。

Data flit

DATFLIT[(D-1):0] format		
Field	**Field width**	**Comments**
QoS	4	-
TgtID	7 to 16	Width determined by NodeID_Width
SrcID	7 to 16	Width determined by NodeID_Width
TxnID	12	-
HomeNID {(NodeID_Width - 5)'b0, MismatchedMECID, PBHA[3:0]}	7 to 16	Width determined by NodeID_Width
Opcode	4	-
RespErr	2	-
Resp	3	-
DataSource[7:0] {5'b0,	8	Indicates Data source in a response MBZ

DATFLIT[(D-1):0] format		
Field	**Field width**	**Comments**
FwdState[2:0]}		Used for DCT
DataPull	1	Used in Stash transactions
CBusy	3	-
MECID	E = 0	No MECID bus
	E = 16	Used for RME-MEC
{4'b0, DBID[11:0]}	16	-
CCID	2	-
DataID	2	-
CacheLineID	6	-
TagOp	2	-
Tag	DW/32 = 4, 8, 16	-
TU	DW/128 = 1, 2, 4	-
TraceTag	1	-
CAH	1	-
NumDat	2	-
Replicate	1	-
RSVDC	Y = 0	No RSVDC bus
	Y = 4, 8, 12, 16, 24, 32	Width determined by Dat_RSVDC_Width.
BE	DW/8 = 16, 32, 64	-
Data	DW = 128, 256, 512	DW = B16.1.13 *Data_Width*
DataCheck	0 or DW/8 = 16, 32, 64	DC = DataCheck
Poison	0 or DW/64 = 2, 4, 8	P = Poison
Total	D = (240 to 267) + Y + DC + P	DW = 128-bit Data
	D = (389 to 416) + Y + DC + P	DW = 256-bit Data
	D = (687 to 714) + Y + DC + P	DW = 512-bit Data

工業技術研究院
Industrial Technology Research Institute

©工業技術研究院 權利所有。