SA500 DSP Detect Board

Ver 2011.04.28

REV	ECO NO.	CHANGE DESCRIPTION	Date
0	NEW	xxx	2011-11-22

PART NO. xxx	SHEET. 01 / 36	TITLE. XXX Circuit Diagram	DRAWING NO. DMBMX.XXX.XXXDL
Designer	xxx		INNOVPOWER
Reviewed	xxx	PRODUCT. XXX	
Process Reviewed	xxx		
Standardized	xxx	PROPRIETARY INFORMATION	
Approved	xxx		

This document must not be copied or reproduced in any form without the prior permission of INNOVPOWER

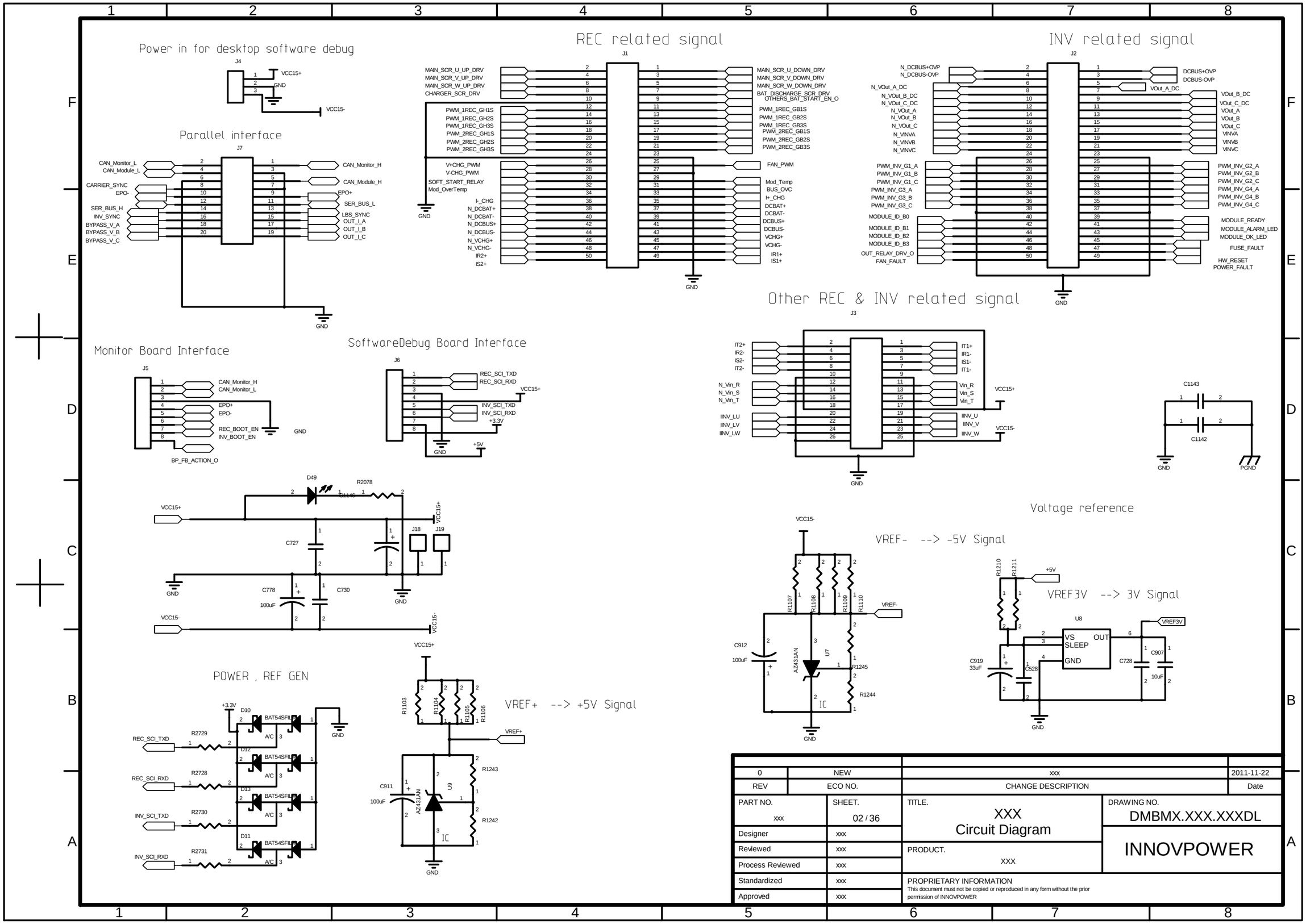

0	NEW	xxx	2011-11-22
REV	ECO NO.	CHANGE DESCRIPTION	Date

PART NO. xxx	SHEET. 02 / 36	TITLE. XXX Circuit Diagram	DRAWING NO. DMBMX.XXX.XXXDL
Designer	xxx		INNOVPOWER
Reviewed	xxx	PRODUCT. XXX	
Process Reviewed	xxx		
Standardized	xxx	PROPRIETARY INFORMATION This document must not be copied or reproduced in any form without the prior permission of INNOVPOWER	
Approved	xxx		

REC DSP

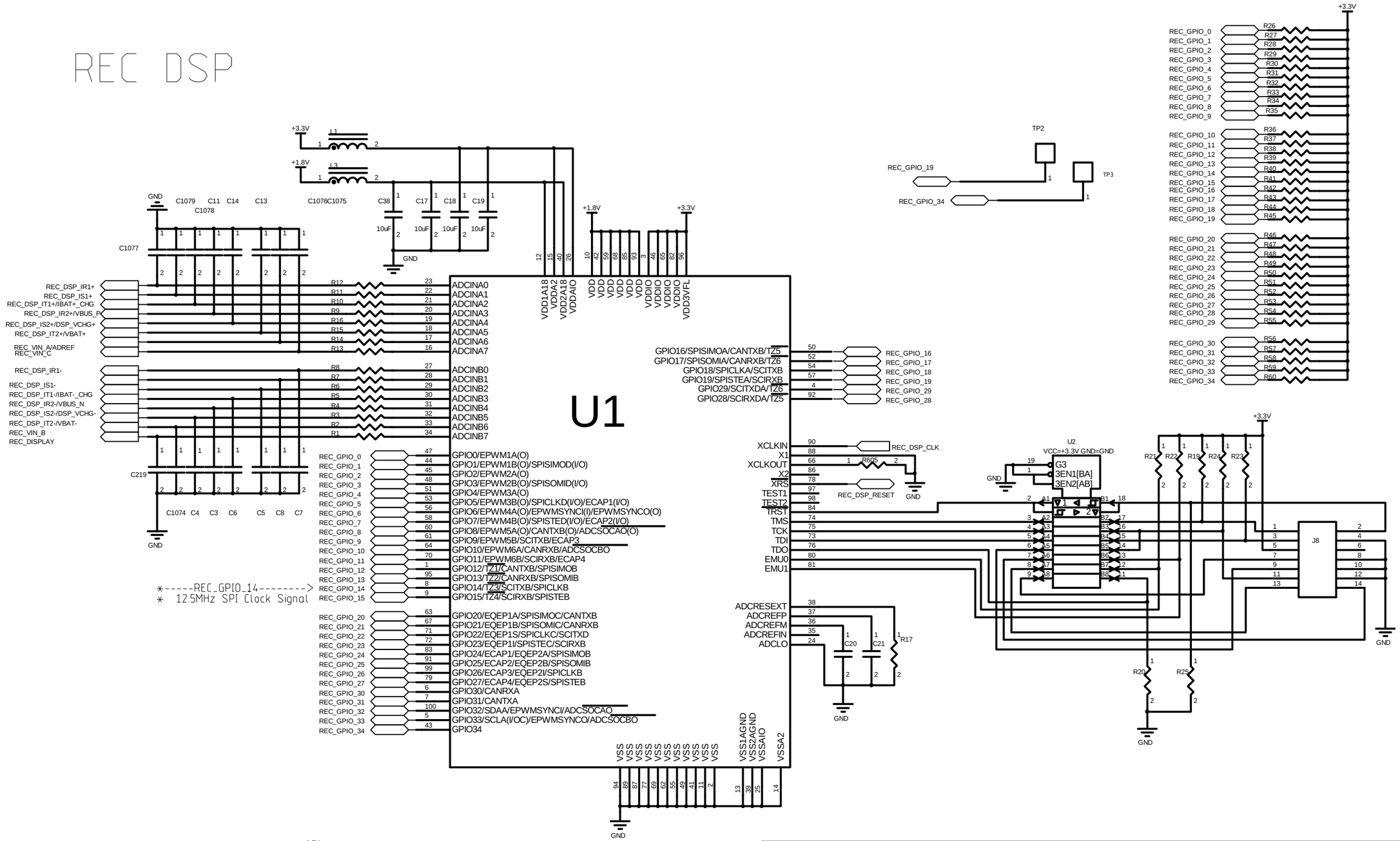

0	NEW	xxx	2011-11-22
REV	ECO NO.	CHANGE DESCRIPTION	Date

PART NO. xxx	SHEET. 03 / 36	TITLE. XXX Circuit Diagram	DRAWING NO. DMBMX.XXX.XXXDL
Designer	xxx		INNOVPOWER
Reviewed	xxx	PRODUCT. XXX	
Process Reviewed	xxx		
Standardized	xxx	PROPRIETARY INFORMATION	
Approved	xxx	This document must not be copied or reproduced in any form without the prior permission of INNOVPOWER	

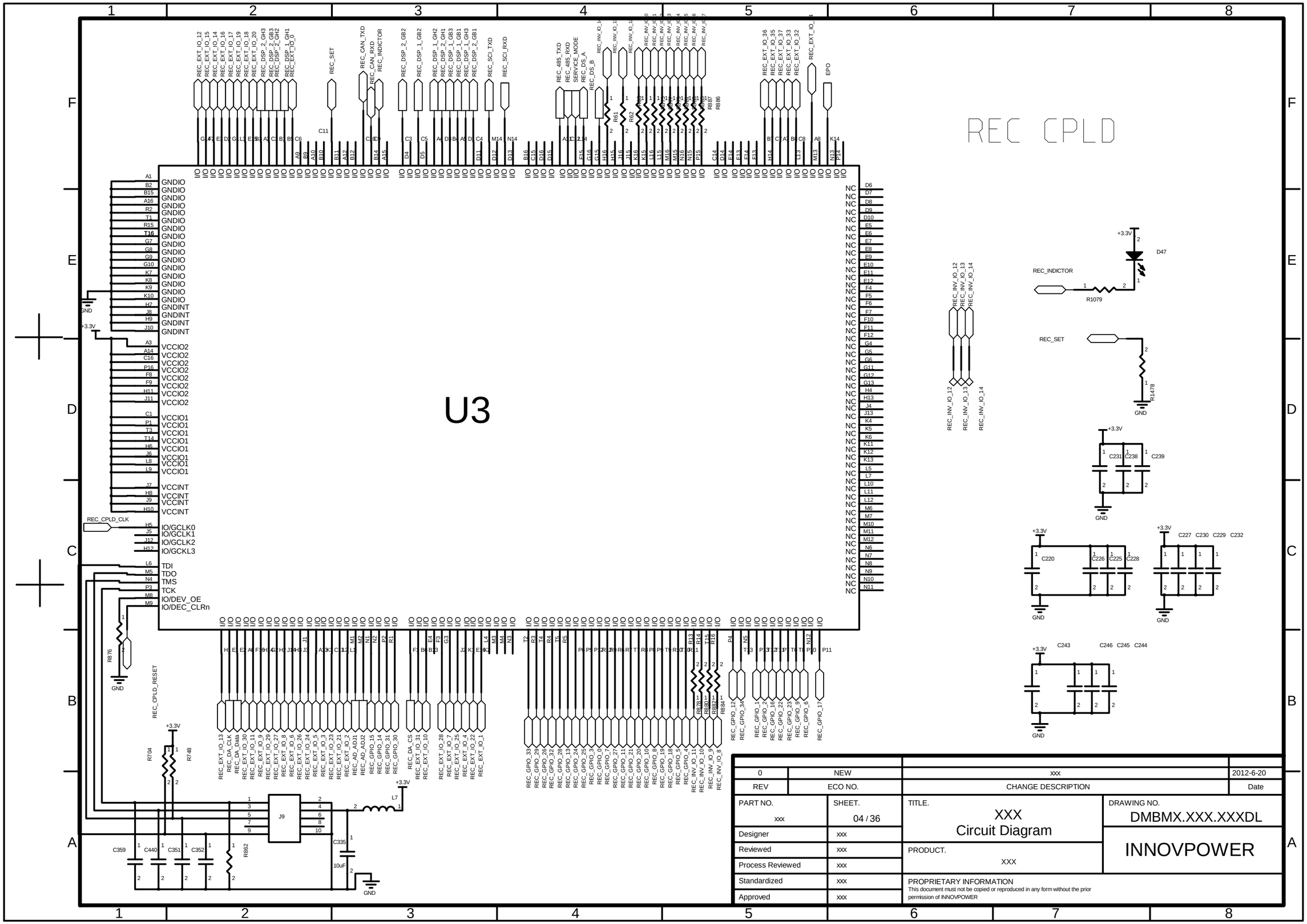

0	NEW	xxx	2012-6-20
REV	ECO NO.	CHANGE DESCRIPTION	Date

PART NO. xxx	SHEET. 04 / 36	TITLE. XXX Circuit Diagram	DRAWING NO. DMBMX.XXX.XXXDL
Designer	xxx		INNOVPOWER
Reviewed	xxx	PRODUCT. XXX	
Process Reviewed	xxx		
Standardized	xxx	PROPRIETARY INFORMATION This document must not be copied or reproduced in any form without the prior permission of INNOVPOWER	
Approved	xxx		

INV DSP

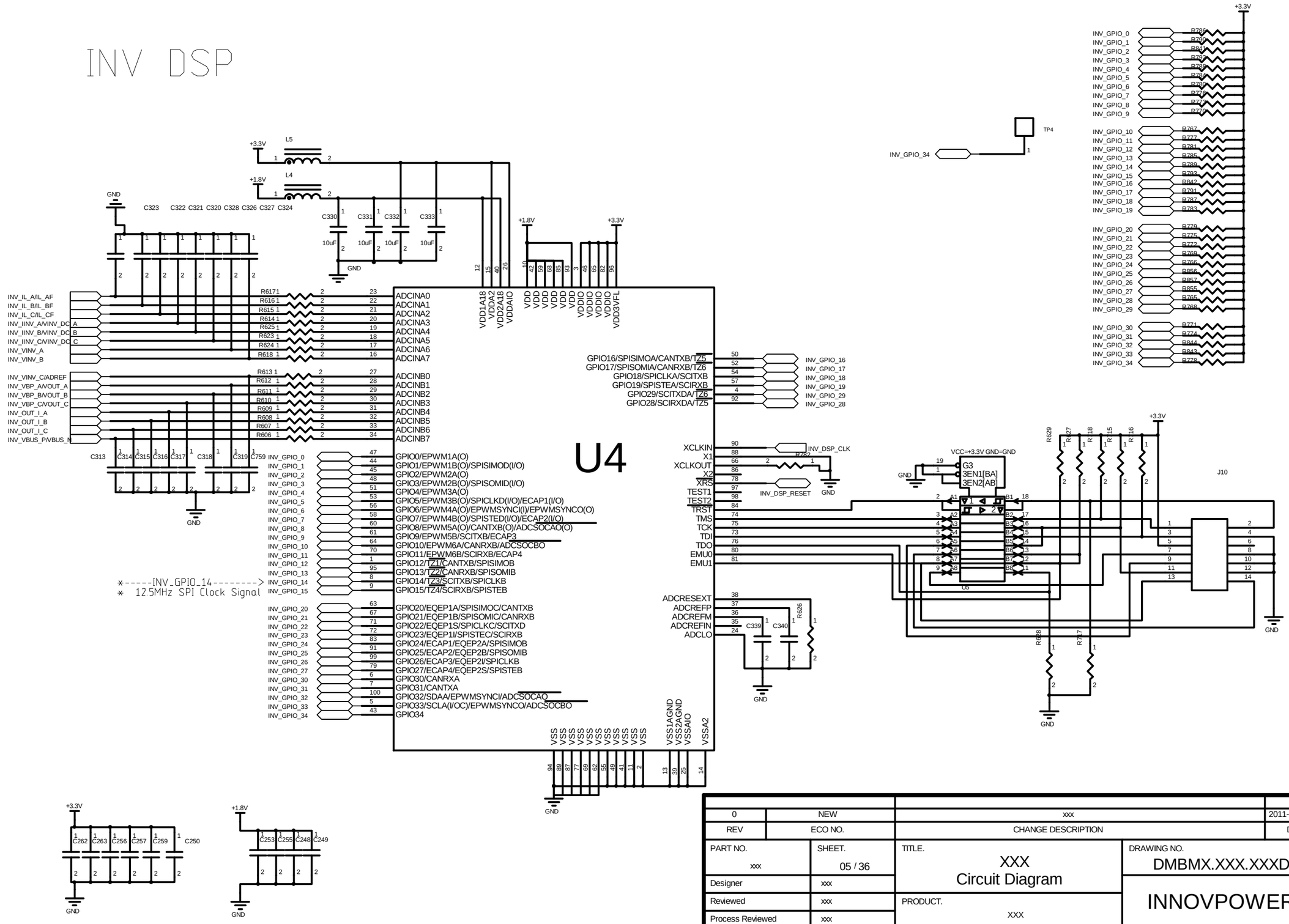

0	NEW	xxx	2011-11-22
REV	ECO NO.	CHANGE DESCRIPTION	Date

PART NO. xxx	SHEET. 05 / 36	TITLE. XXX Circuit Diagram	DRAWING NO. DMBMX.XXX.XXXDL
Designer	xxx		INNOVPOWER
Reviewed	xxx	PRODUCT. XXX	
Process Reviewed	xxx		
Standardized	xxx	PROPRIETARY INFORMATION This document must not be copied or reproduced in any form without the prior permission of INNOVPOWER	
Approved	xxx		

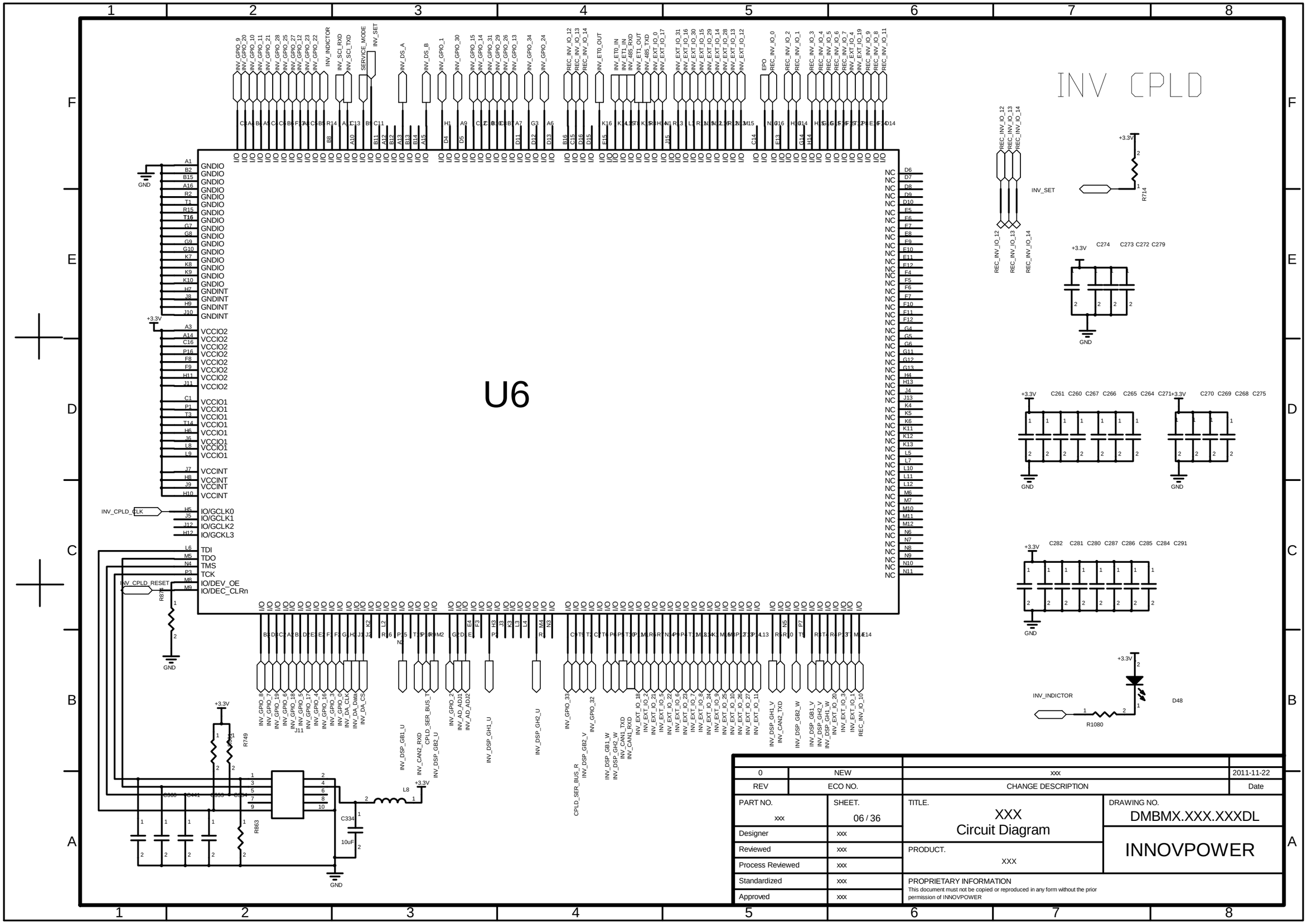

0	NEW	xxx	2011-11-22
REV	ECO NO.	CHANGE DESCRIPTION	Date

PART NO. xxx	SHEET. 06 / 36	TITLE. XXX Circuit Diagram	DRAWING NO. DMBMX.XXX.XXXDL
Designer	xxx		INNOVPOWER
Reviewed	xxx	PRODUCT. XXX	
Process Reviewed	xxx		
Standardized	xxx	PROPRIETARY INFORMATION This document must not be copied or reproduced in any form without the prior permission of INNOVPOWER	
Approved	xxx		

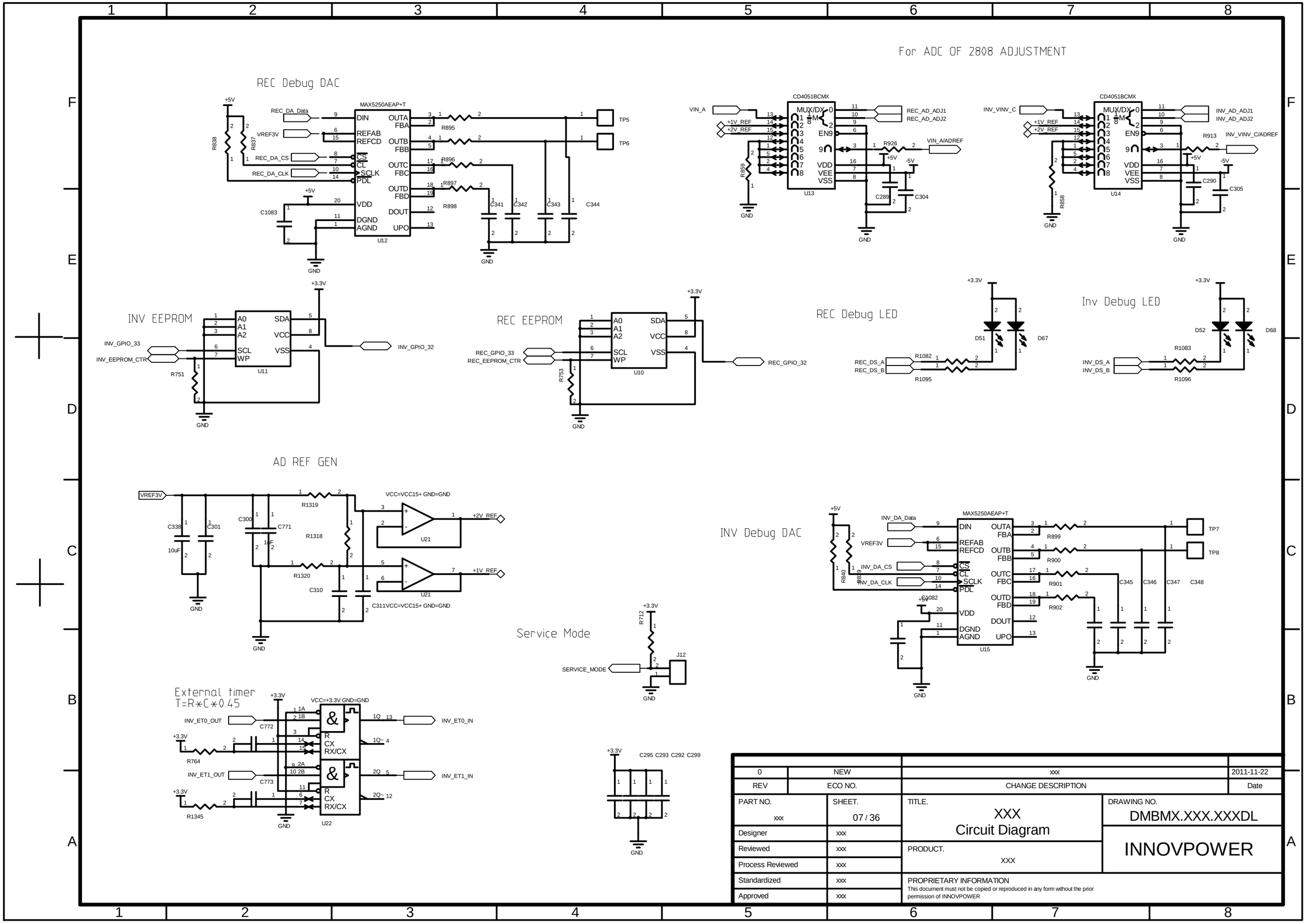

0	NEW	xxx	2011-11-22
REV	ECO NO.	CHANGE DESCRIPTION	Date

PART NO. xxx	SHEET. 07 / 36	TITLE. XXX Circuit Diagram	DRAWING NO. DMBMX.XXX.XXXDL
Designer	xxx		INNOVPOWER
Reviewed	xxx	PRODUCT. XXX	
Process Reviewed	xxx		
Standardized	xxx	PROPRIETARY INFORMATION	
Approved	xxx	This document must not be copied or reproduced in any form without the prior permission of INNOVPOWER	

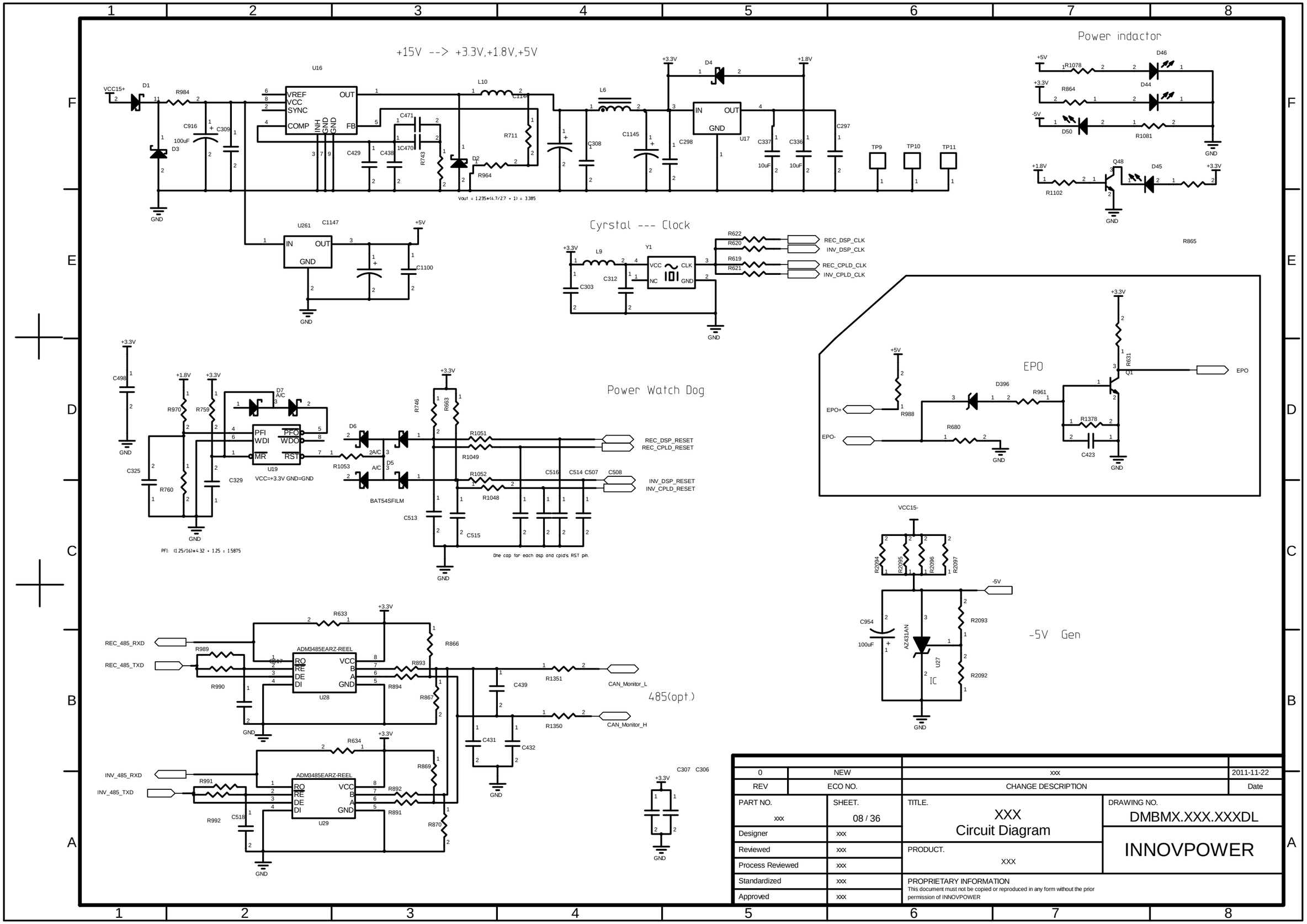

0	NEW	xxx	2011-11-22
REV	ECO NO.	CHANGE DESCRIPTION	Date

PART NO. xxx	SHEET. 08 / 36	TITLE. XXX Circuit Diagram	DRAWING NO. DMBMX.XXX.XXXDL
Designer	xxx		INNOVPOWER
Reviewed	xxx	PRODUCT. XXX	
Process Reviewed	xxx		
Standardized	xxx	PROPRIETARY INFORMATION	
Approved	xxx	This document must not be copied or reproduced in any form without the prior permission of INNOVPOWER	

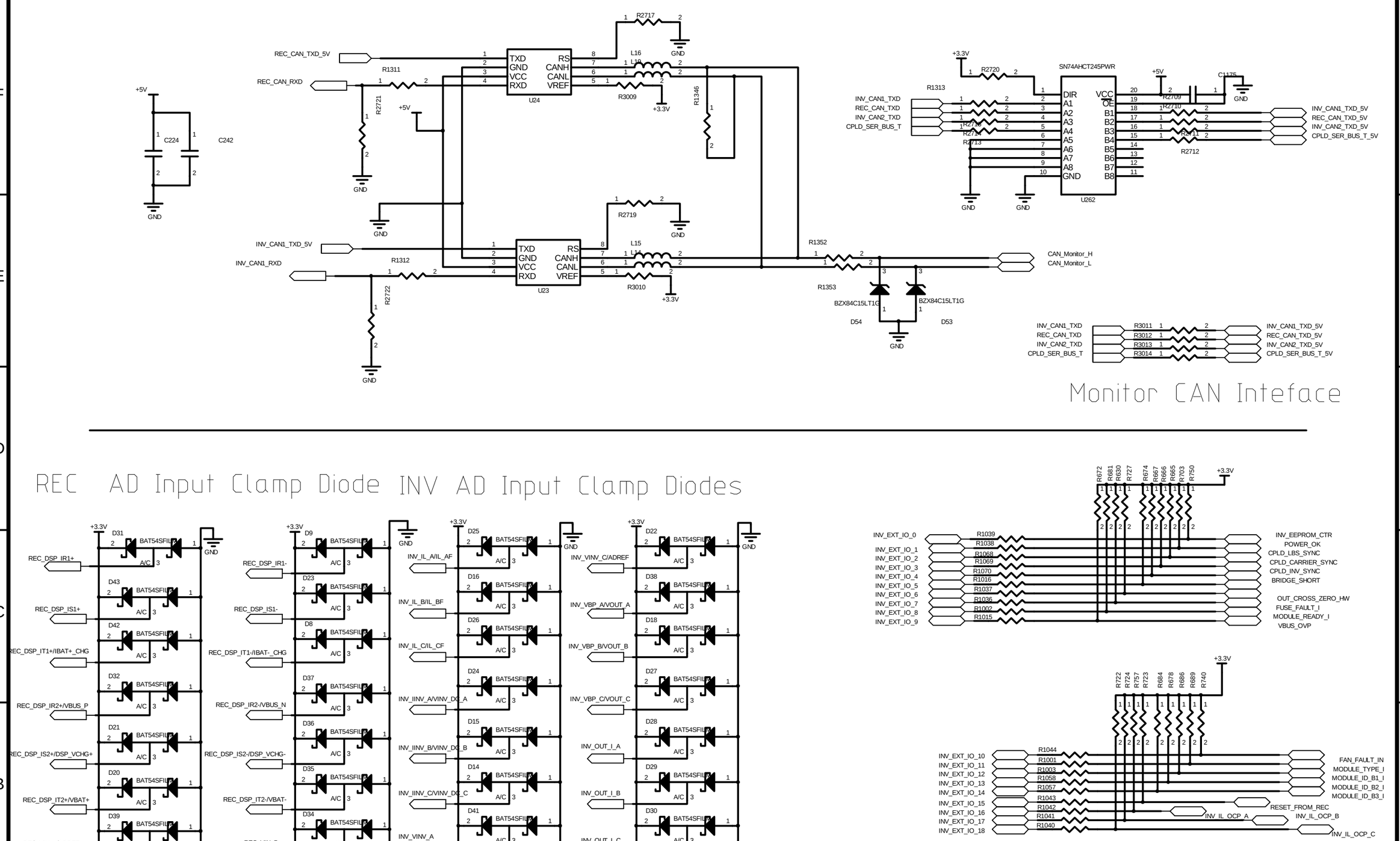

0	NEW	xxx	2011-11-22
REV	ECO NO.	CHANGE DESCRIPTION	Date

PART NO. xxx	SHEET. 09 / 36	TITLE. XXX Circuit Diagram	DRAWING NO. DMBMX.XXX.XXXDL
Designer	xxx		INNOVPOWER
Reviewed	xxx	PRODUCT. XXX	
Process Reviewed	xxx		
Standardized	xxx	PROPRIETARY INFORMATION This document must not be copied or reproduced in any form without the prior permission of INNOVPOWER	
Approved	xxx		

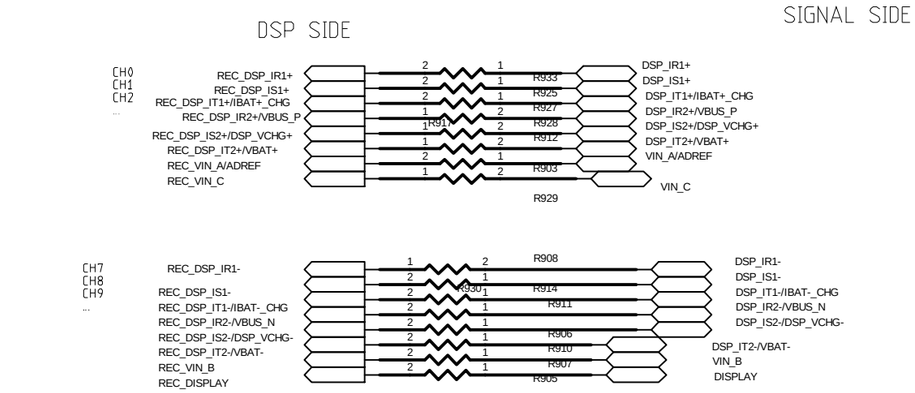

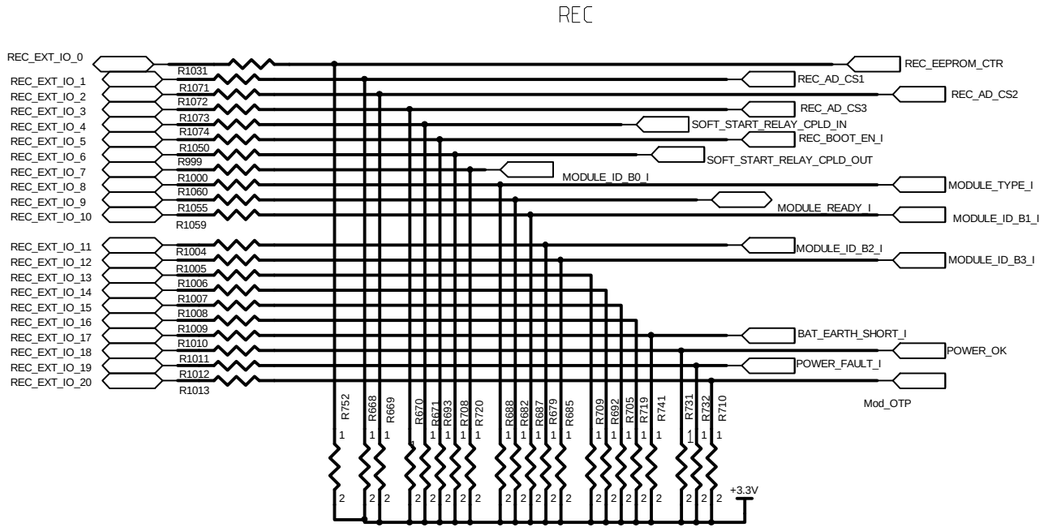

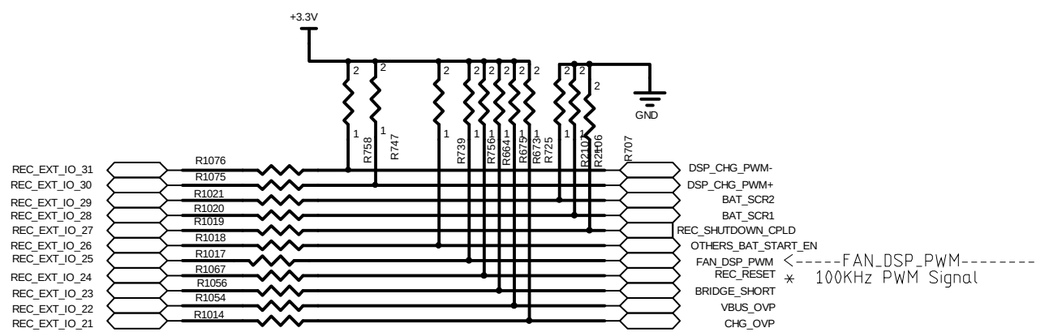

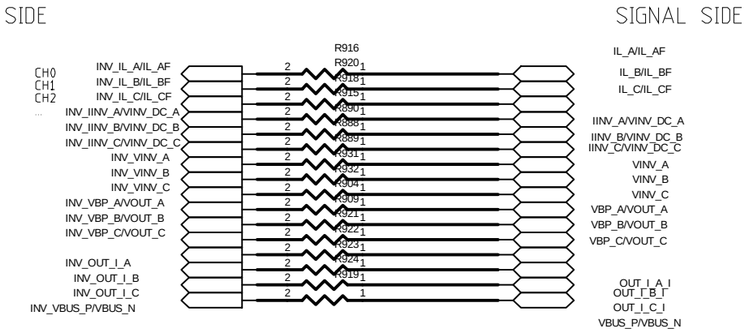

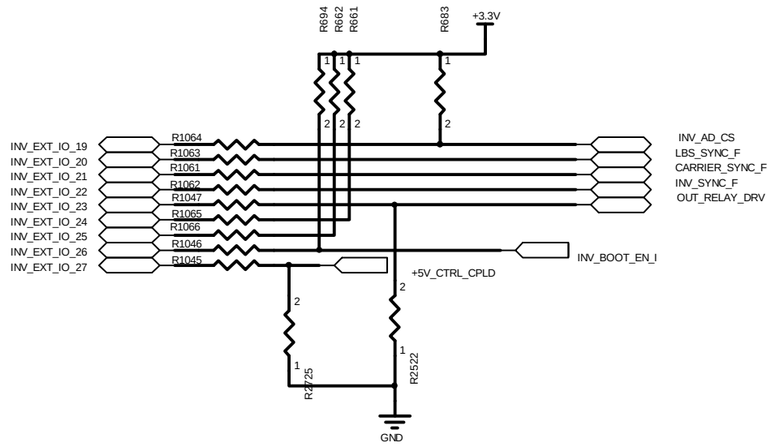

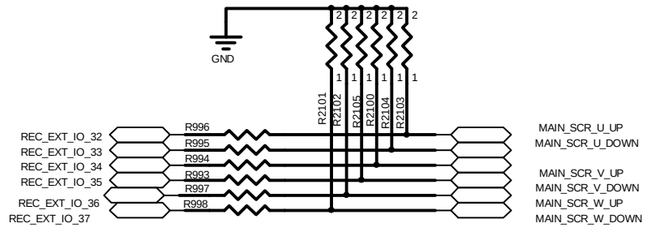

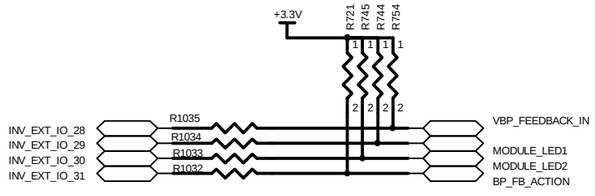

REV	ECO NO.	CHANGE DESCRIPTION	Date
0	NEW	xxx	2011-11-22

PART NO. xxx	SHEET. 10 / 36	TITLE. XXX Circuit Diagram	DRAWING NO. DMBMX.XXX.XXXDL
Designer	xxx		INNOVPOWER
Reviewed	xxx	PRODUCT. XXX	
Process Reviewed	xxx		
Standardized	xxx	PROPRIETARY INFORMATION	
Approved	xxx	This document must not be copied or reproduced in any form without the prior permission of INNOVPOWER	

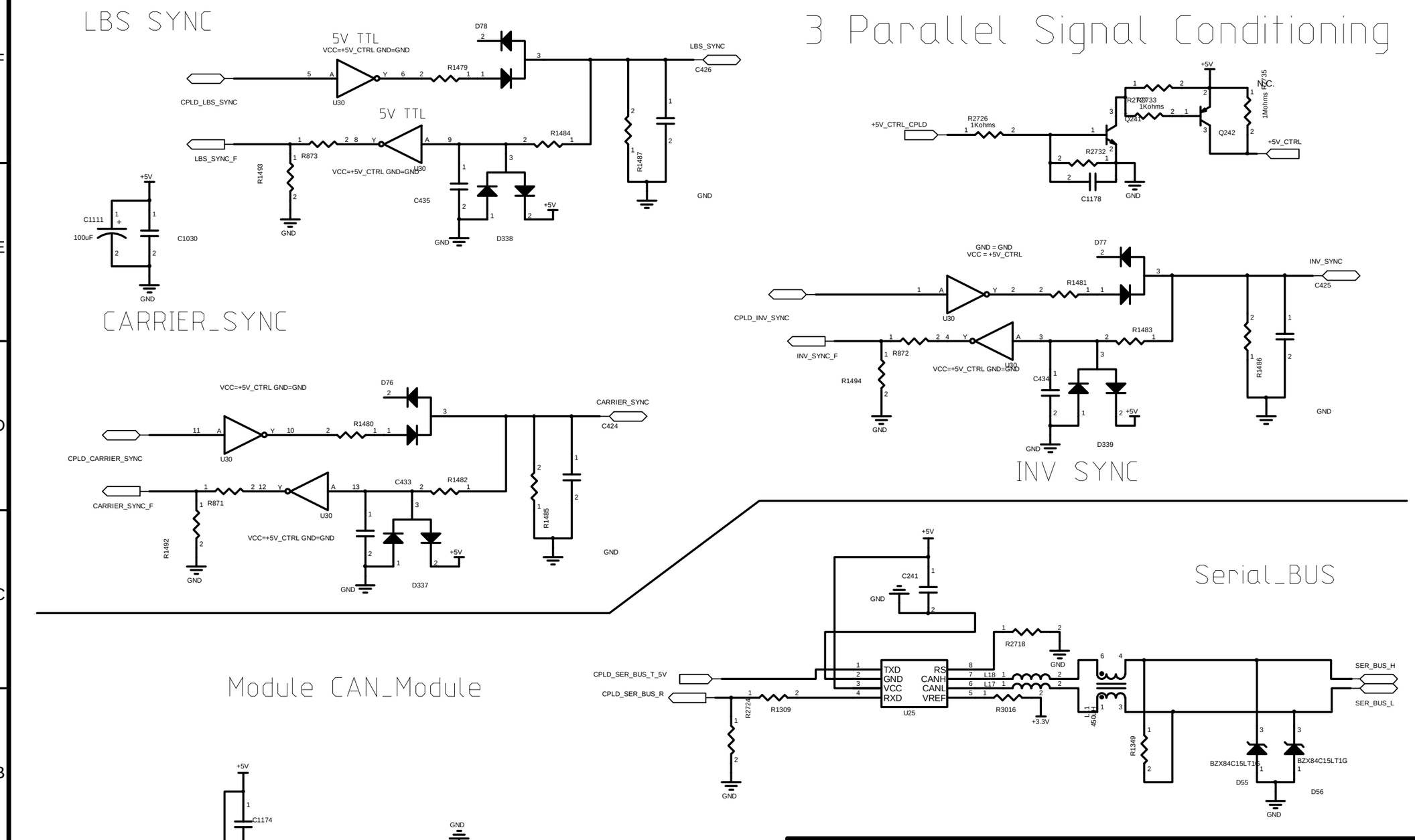

0	NEW	xxx	2011-11-22
REV	ECO NO.	CHANGE DESCRIPTION	Date

PART NO. xxx	SHEET. 11 / 36	TITLE. XXX Circuit Diagram	DRAWING NO. DMBMX.XXX.XXXDL
Designer	xxx		INNOVPOWER
Reviewed	xxx	PRODUCT. xxx	
Process Reviewed	xxx		
Standardized	xxx	PROPRIETARY INFORMATION	
Approved	xxx	This document must not be copied or reproduced in any form without the prior permission of INNOVPOWER	

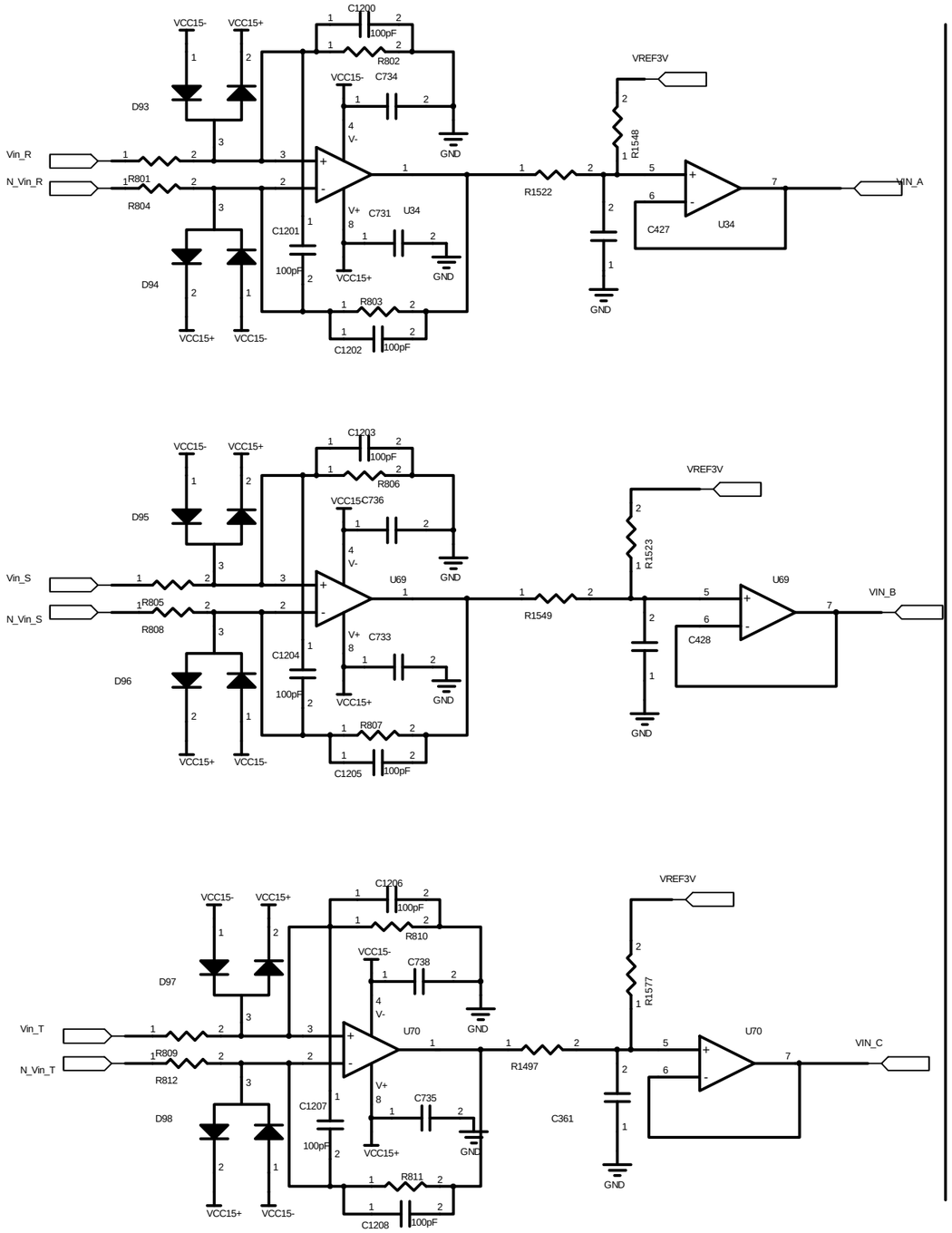

Main input voltage detect

-545V to 545V

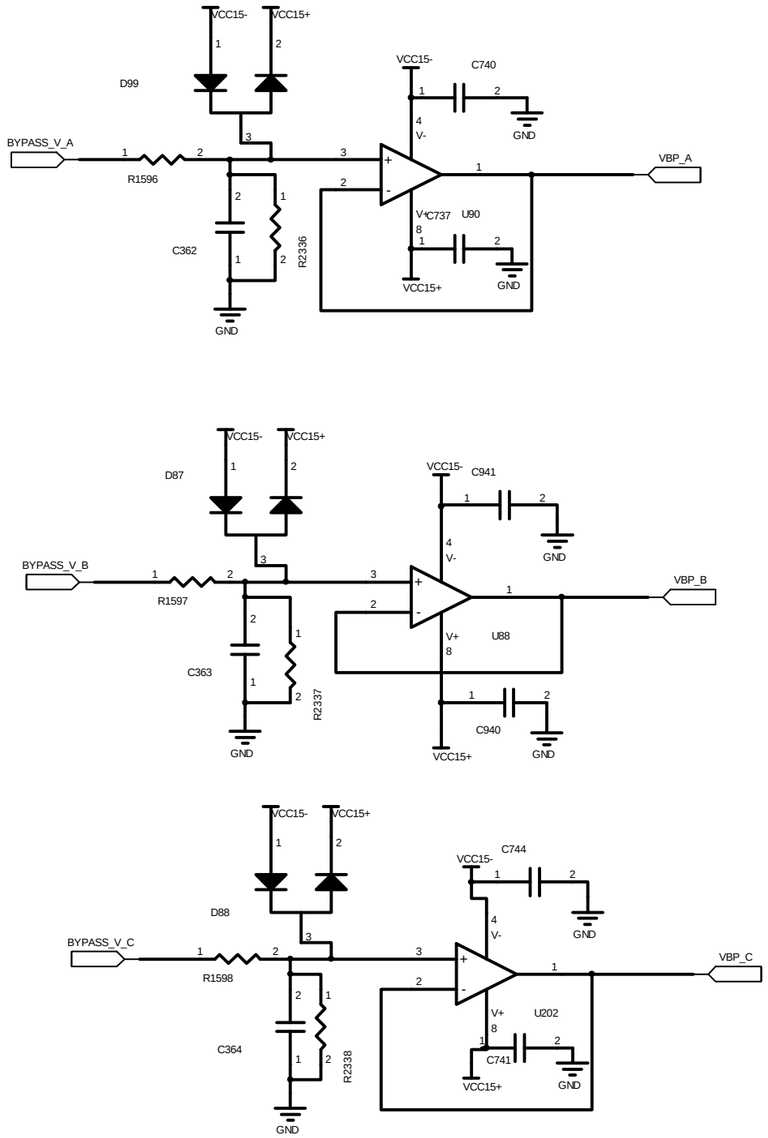

Bypass Voltage Detect

0	NEW	xxx	2011-11-22
REV	ECO NO.	CHANGE DESCRIPTION	Date

PART NO. xxx	SHEET. 12 / 36	TITLE. XXX Circuit Diagram	DRAWING NO. DMBMX.XXX.XXXDL
Designer	xxx		
Reviewed	xxx	PRODUCT. XXX	INNOVPOWER
Process Reviewed	xxx		
Standardized	xxx	PROPRIETARY INFORMATION This document must not be copied or reproduced in any form without the prior permission of INNOVPOWER	
Approved	xxx		

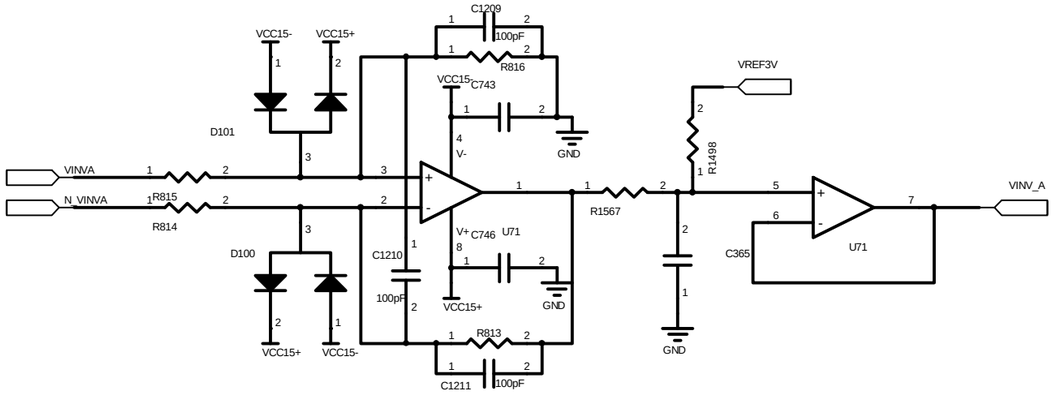

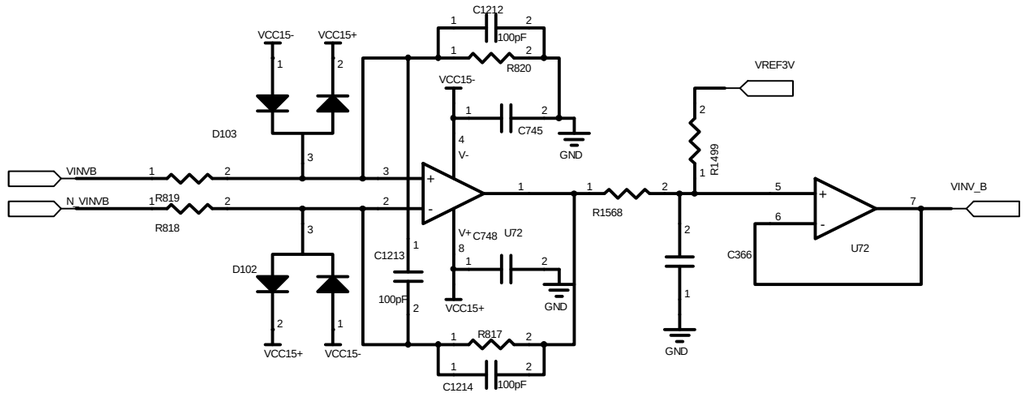

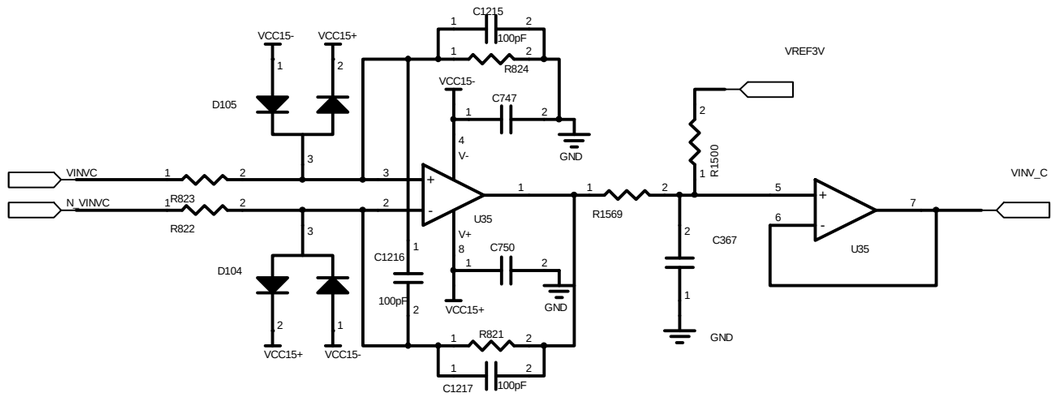

INV Voltage Detect

-545V to 545V

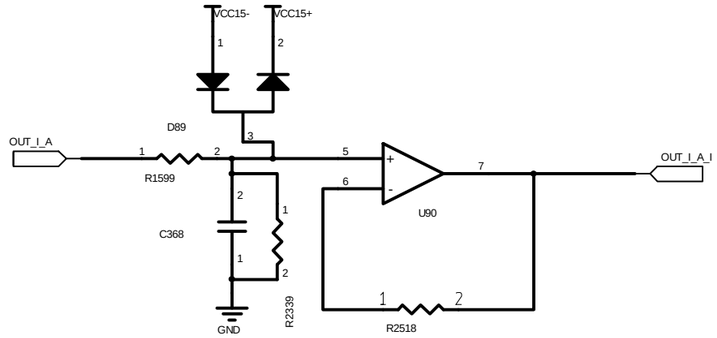

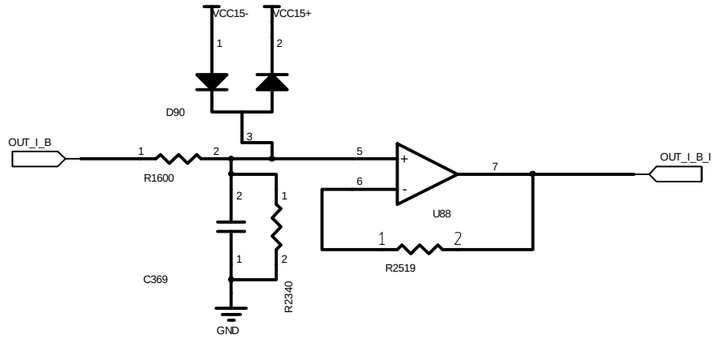

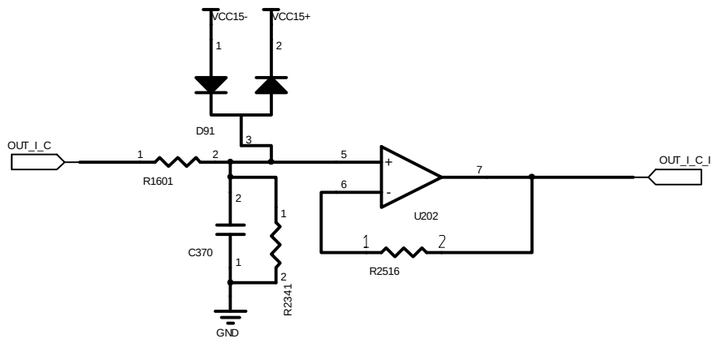

Total Output current Detect

REV	ECO NO.	CHANGE DESCRIPTION	Date
0	NEW	xxx	2011-11-22

PART NO. xxx	SHEET. 13 / 36	TITLE. XXX Circuit Diagram	DRAWING NO. DMBMX.XXX.XXXDL
Designer	xxx		INNOVPOWER
Reviewed	xxx	PRODUCT. xxx	
Process Reviewed	xxx		
Standardized	xxx	PROPRIETARY INFORMATION This document must not be copied or reproduced in any form without the prior permission of INNOVPOWER	
Approved	xxx		

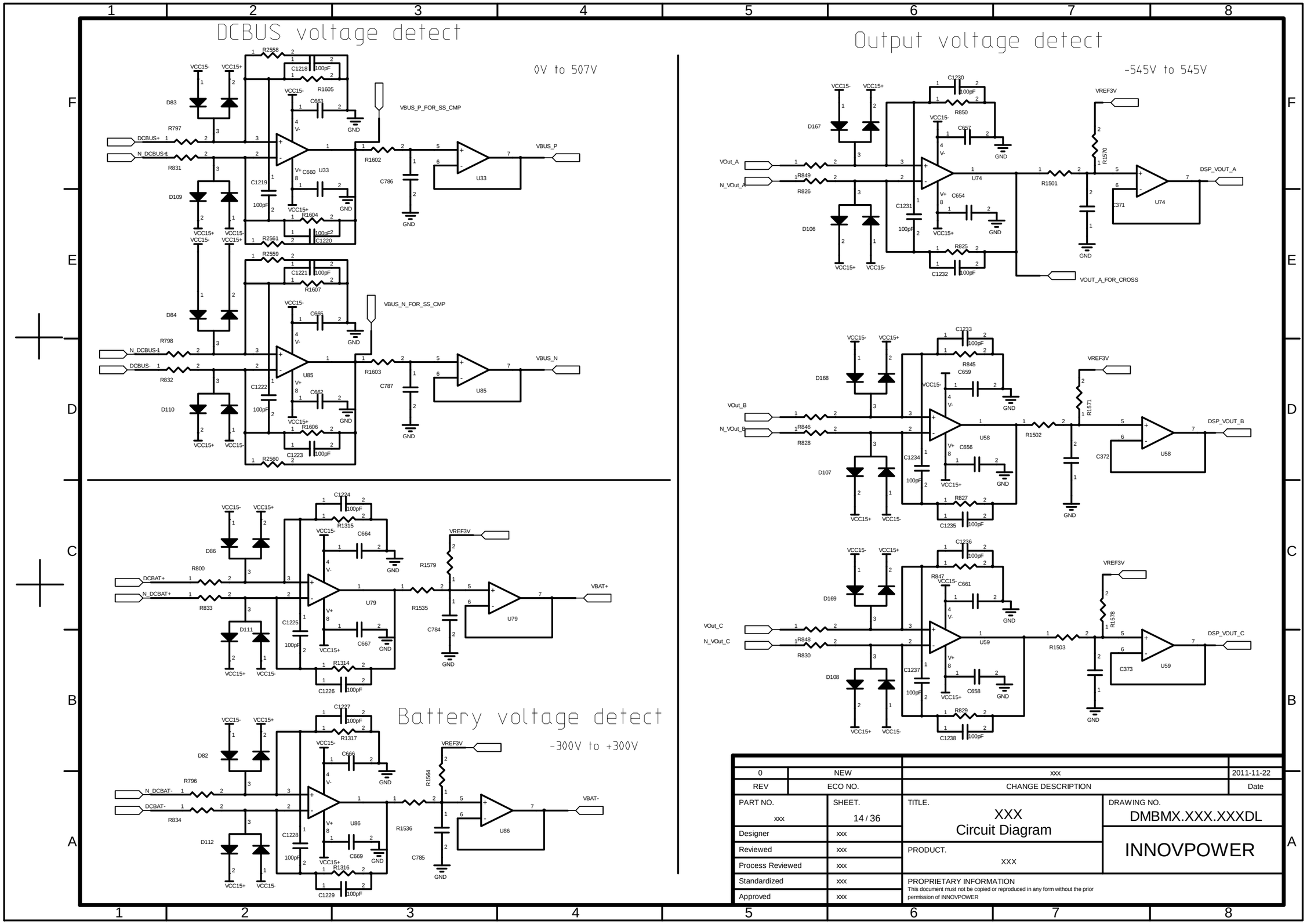

0	NEW	xxx	2011-11-22
REV	ECO NO.	CHANGE DESCRIPTION	Date

PART NO. xxx	SHEET. 14 / 36	TITLE. XXX Circuit Diagram	DRAWING NO. DMBMX.XXX.XXXDL
Designer	xxx		INNOVPOWER
Reviewed	xxx	PRODUCT. XXX	
Process Reviewed	xxx		
Standardized	xxx	PROPRIETARY INFORMATION This document must not be copied or reproduced in any form without the prior permission of INNOVPOWER	
Approved	xxx		

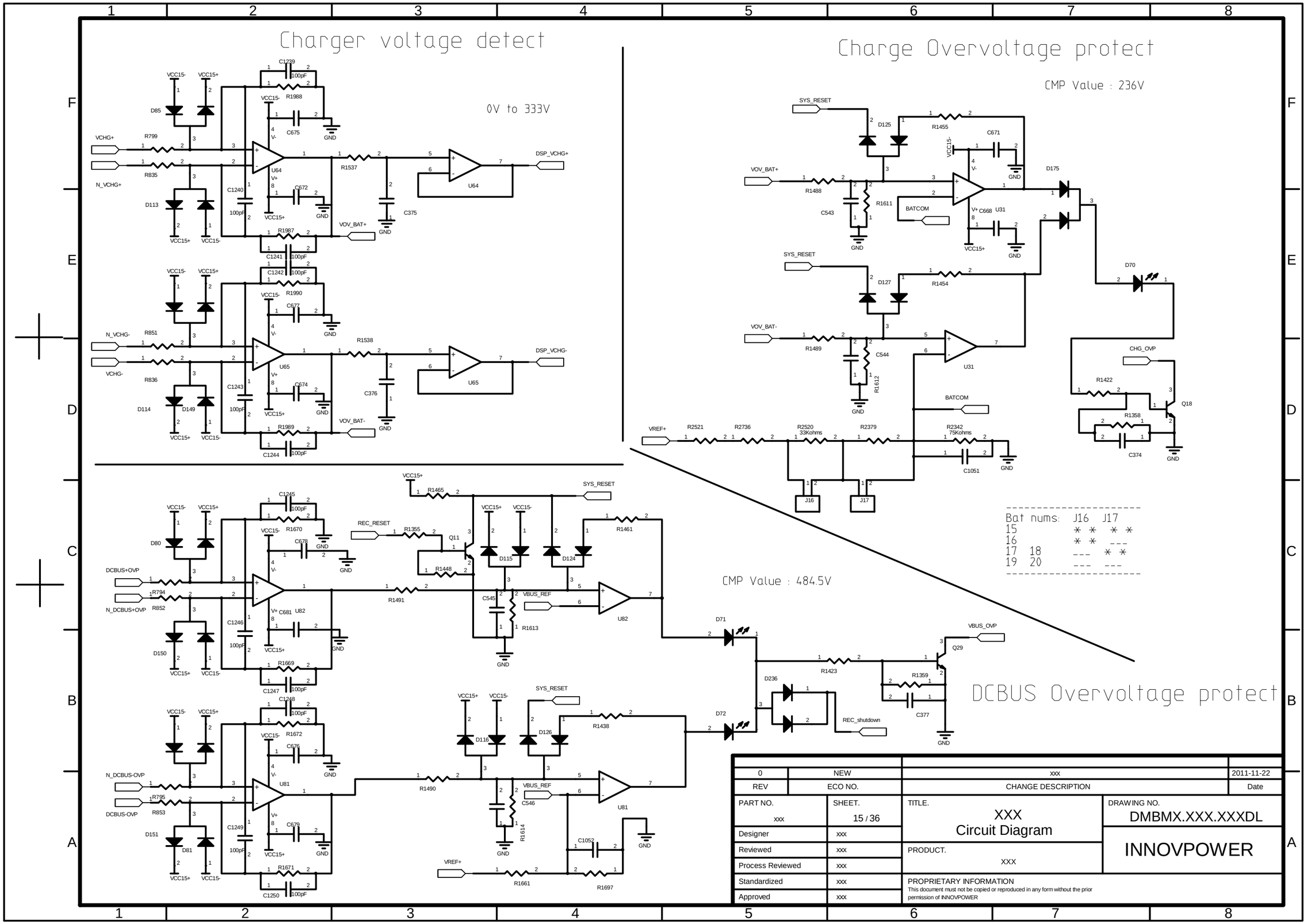

0	NEW	xxx	2011-11-22
REV	ECO NO.	CHANGE DESCRIPTION	Date

PART NO. xxx	SHEET. 15 / 36	TITLE. XXX Circuit Diagram	DRAWING NO. DMBMX.XXX.XXXDL
Designer	xxx		INNOVPOWER
Reviewed	xxx	PRODUCT. XXX	
Process Reviewed	xxx		
Standardized	xxx	PROPRIETARY INFORMATION	
Approved	xxx	This document must not be copied or reproduced in any form without the prior permission of INNOVPOWER	

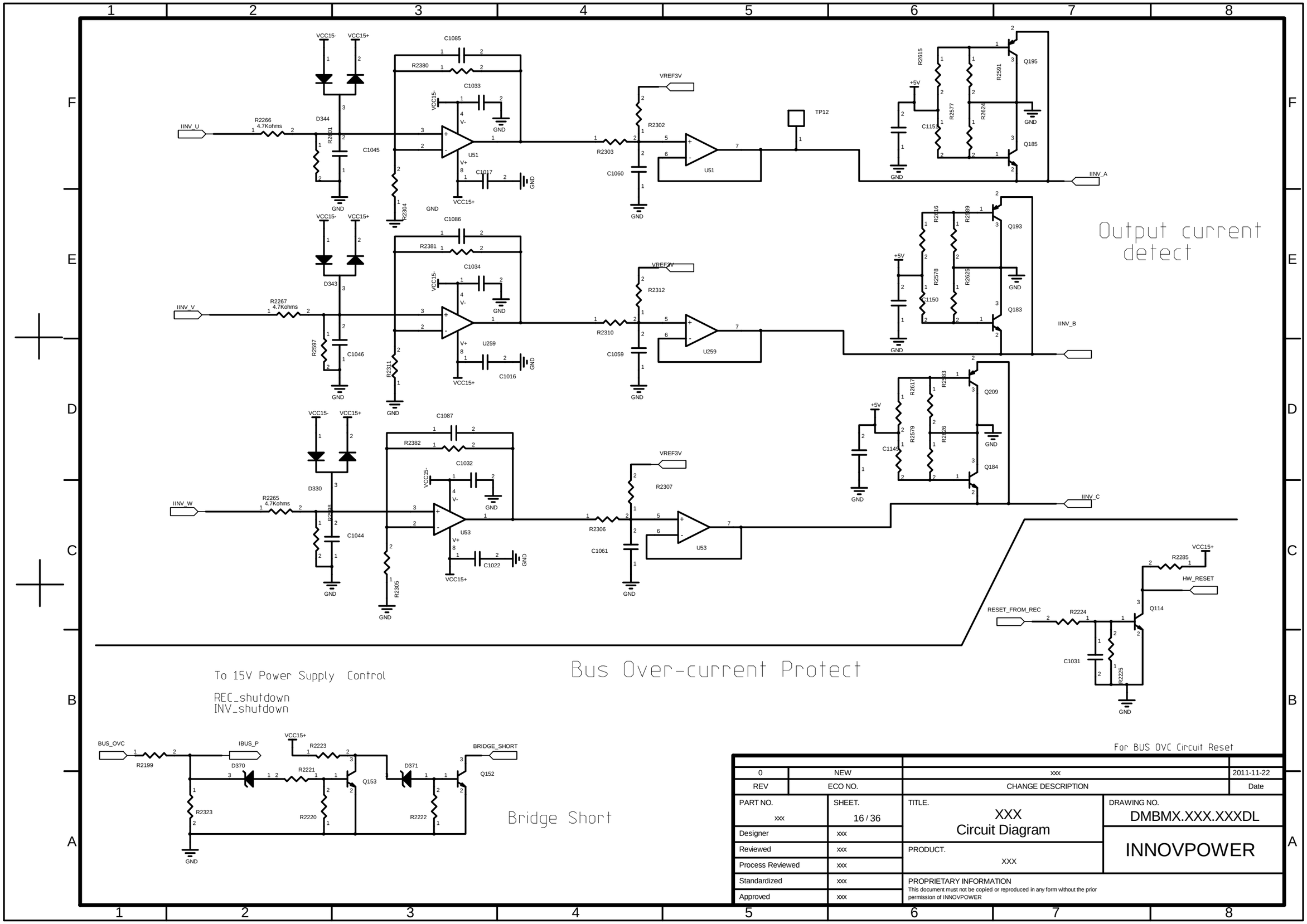

0	NEW	xxx	2011-11-22
REV	ECO NO.	CHANGE DESCRIPTION	Date

PART NO. xxx	SHEET. 16 / 36	TITLE. XXX Circuit Diagram	DRAWING NO. DMBMX.XXX.XXXDL
Designer	xxx		INNOVPOWER
Reviewed	xxx	PRODUCT. XXX	
Process Reviewed	xxx		
Standardized	xxx	PROPRIETARY INFORMATION	
Approved	xxx	This document must not be copied or reproduced in any form without the prior permission of INNOVPOWER	

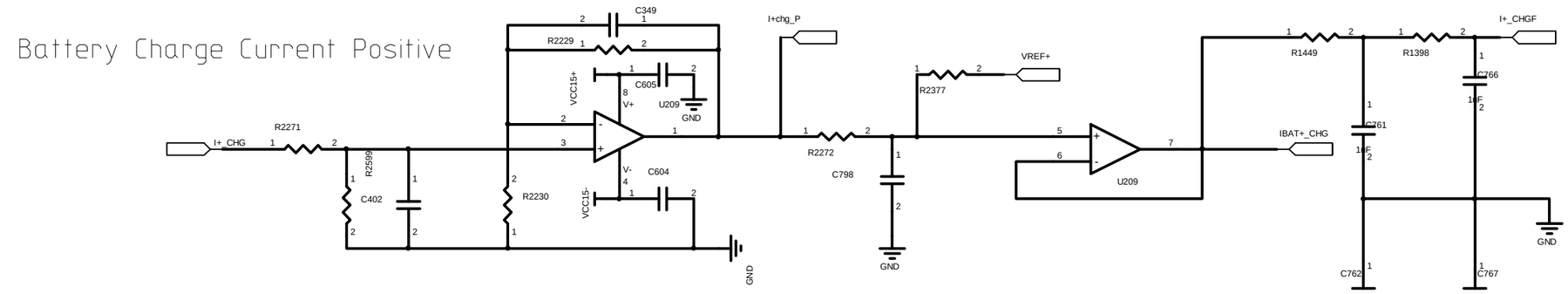

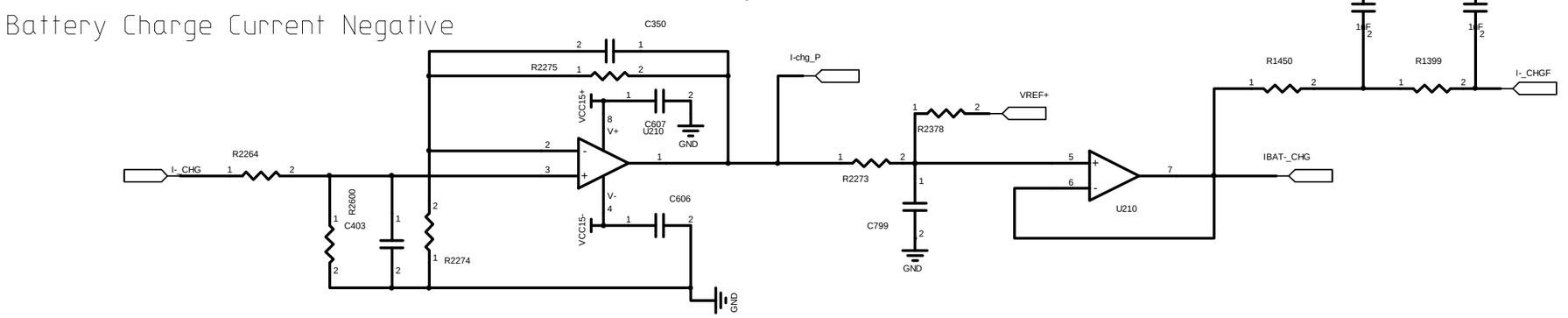

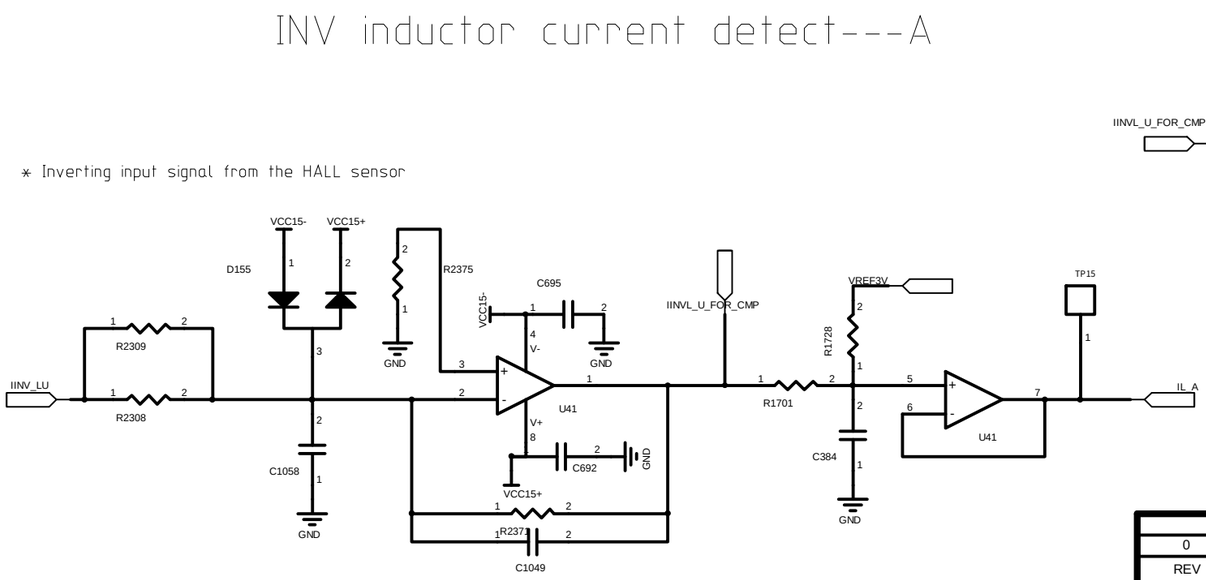

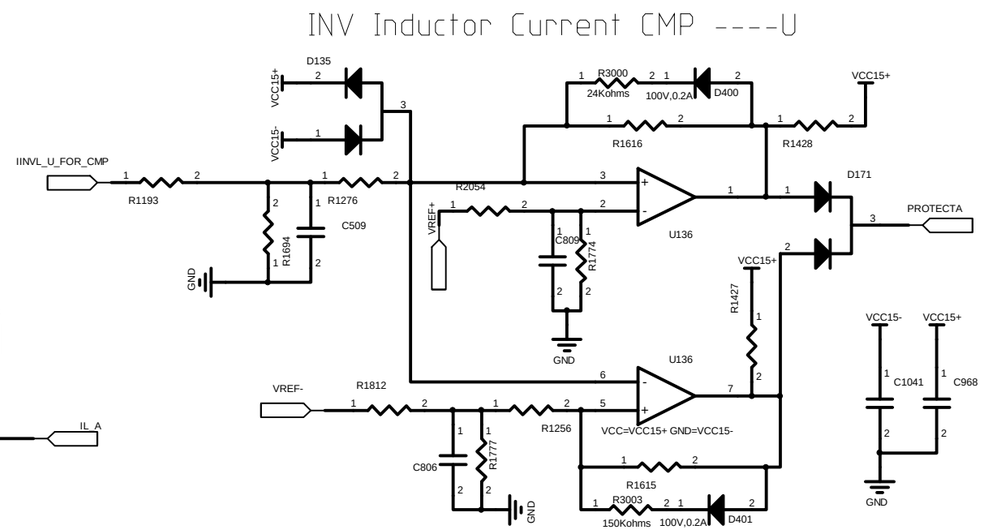

0	NEW	xxx	2011-11-22
REV	ECO NO.	CHANGE DESCRIPTION	Date

PART NO. xxx	SHEET. 17 / 36	TITLE. XXX Circuit Diagram	DRAWING NO. DMBMX.XXX.XXXDL
Designer	xxx		INNOVPOWER
Reviewed	xxx	PRODUCT. XXX	
Process Reviewed	xxx		
Standardized	xxx	PROPRIETARY INFORMATION	
Approved	xxx	This document must not be copied or reproduced in any form without the prior permission of INNOVPOWER	

INV inductor current detect---B

* Inverting input signal from the HALL sensor

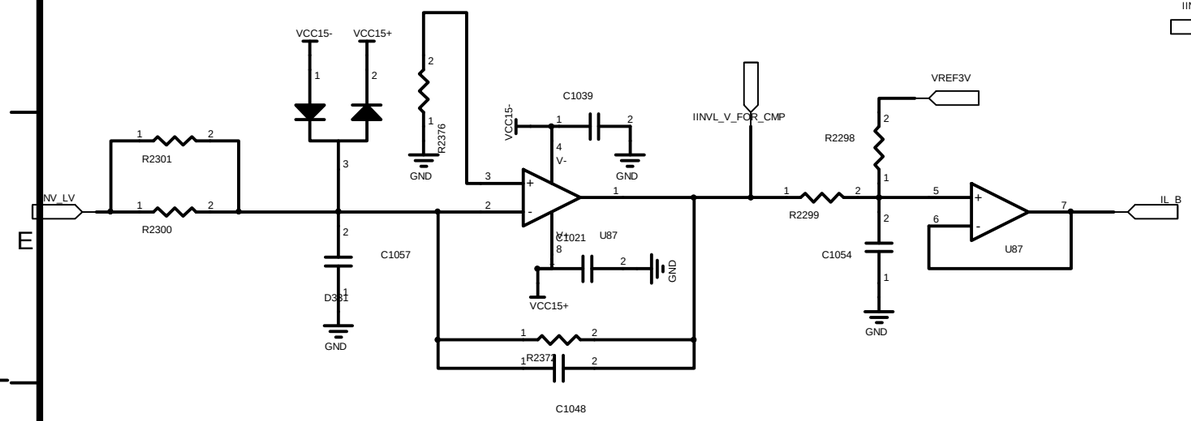

INV Inductor Current CMP ----V

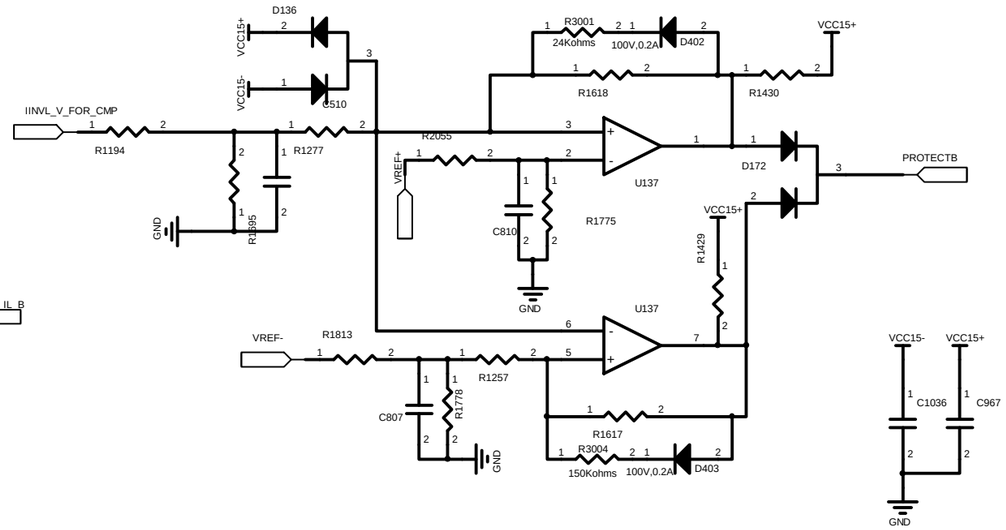

INV inductor current detect---C

* Inverting input signal from the HALL sensor

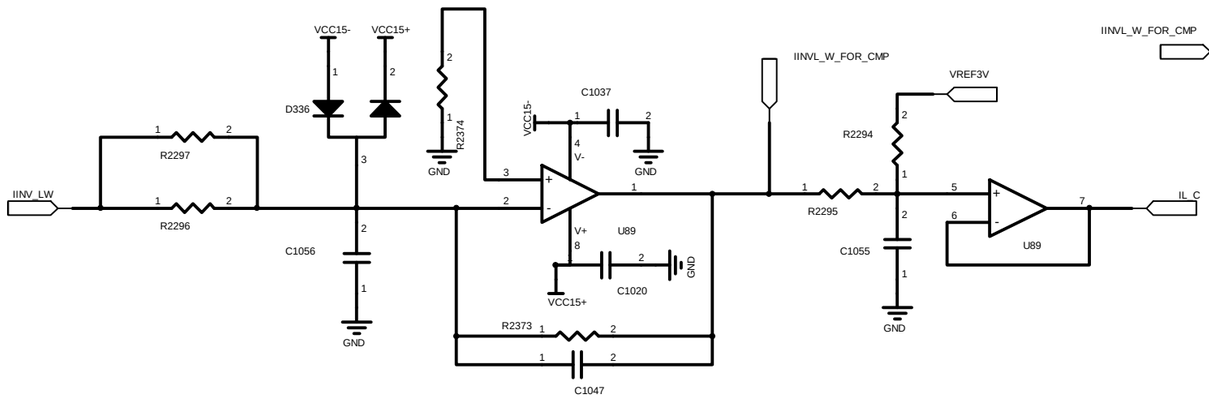

INV Inductor Current CMP ----W

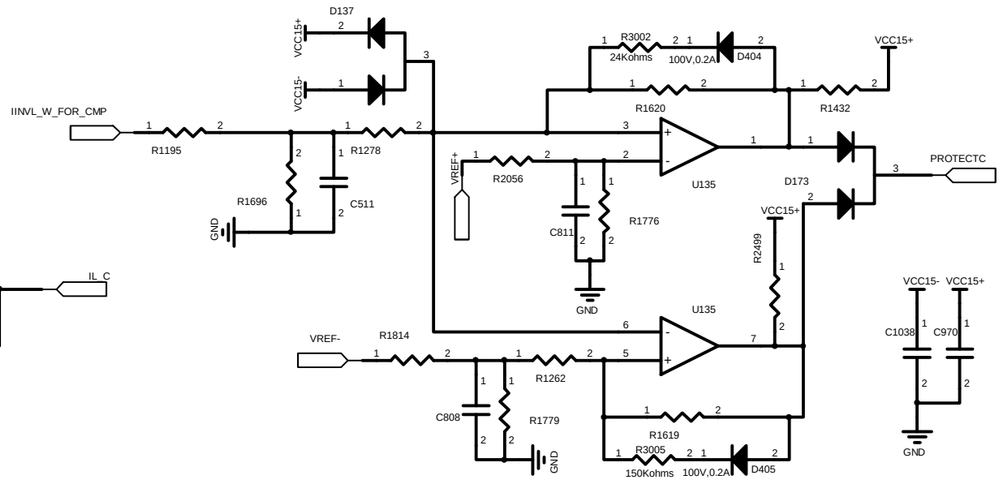

0	NEW	xxx	2011-11-22
REV	ECO NO.	CHANGE DESCRIPTION	Date

PART NO. xxx	SHEET. 18 / 36	TITLE. XXX Circuit Diagram	DRAWING NO. DMBMX.XXX.XXXDL
Designer	xxx		INNOVPOWER
Reviewed	xxx	PRODUCT. XXX	
Process Reviewed	xxx		
Standardized	xxx	PROPRIETARY INFORMATION This document must not be copied or reproduced in any form without the prior permission of INNOVPOWER	
Approved	xxx		

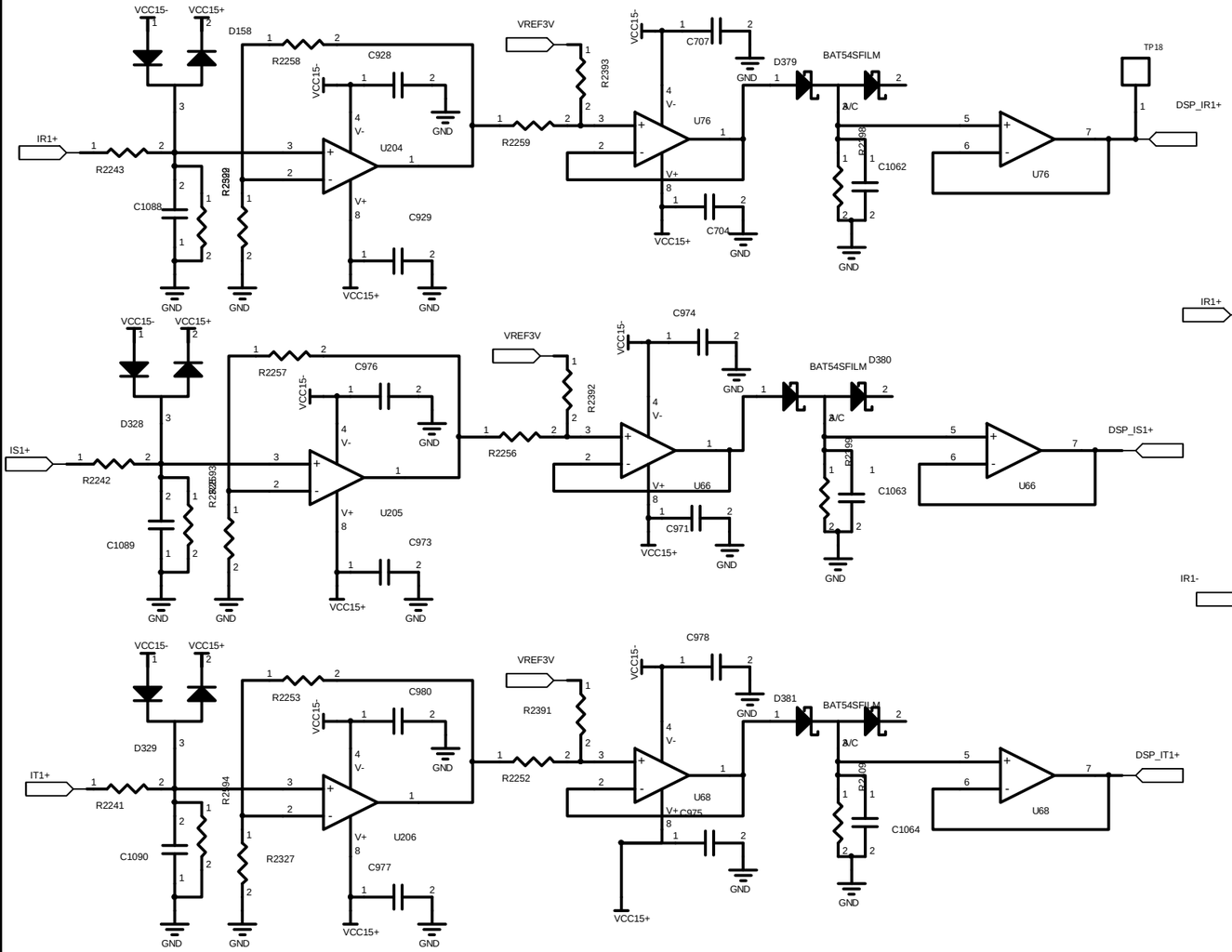

Input Current CMP 1st PFC A

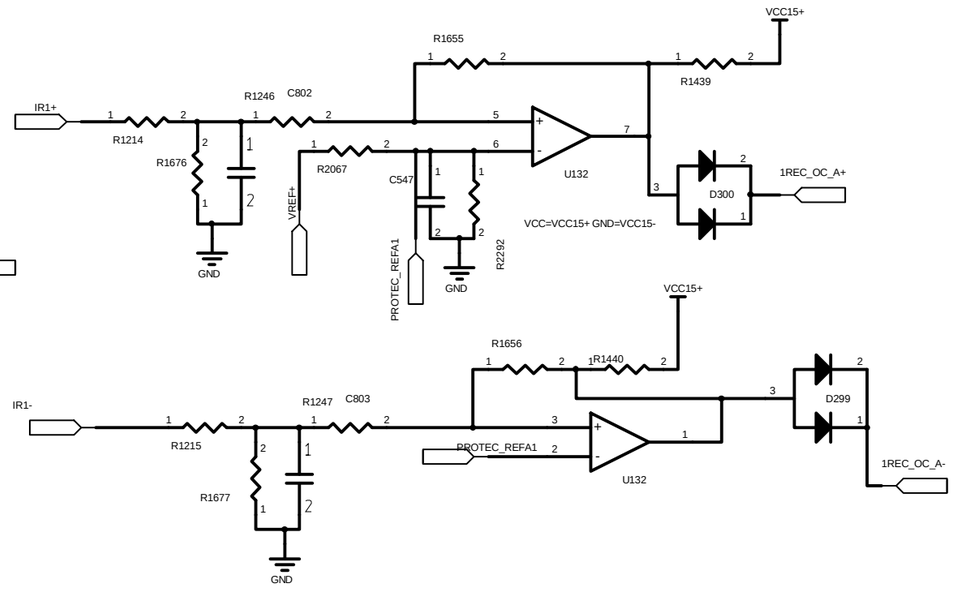

Input Current Conditioning

1st REC PFC I+

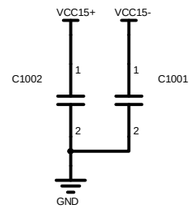

REV	ECO NO.	CHANGE DESCRIPTION	Date
0	NEW	xxx	2011-11-22

PART NO. xxx	SHEET. 19 / 36	TITLE. XXX Circuit Diagram	DRAWING NO. DMBMX.XXX.XXXDL
Designer	xxx		
Reviewed	xxx	PRODUCT. XXX	INNOVPOWER
Process Reviewed	xxx		
Standardized	xxx	PROPRIETARY INFORMATION	
Approved	xxx	This document must not be copied or reproduced in any form without the prior permission of INNOVPOWER	

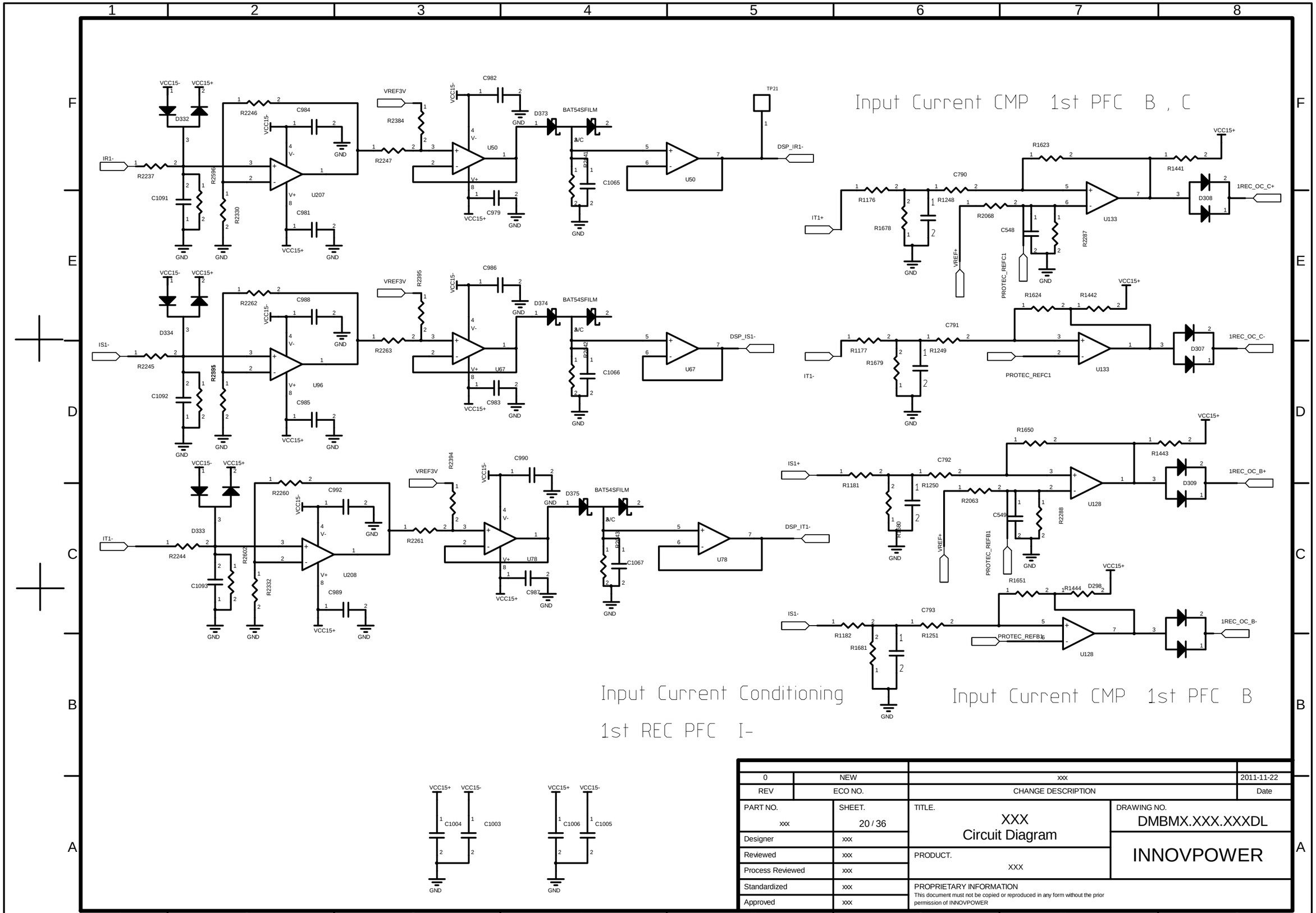

0	NEW	xxx	2011-11-22
REV	ECO NO.	CHANGE DESCRIPTION	Date

PART NO. xxx	SHEET. 20 / 36	TITLE. XXX Circuit Diagram	DRAWING NO. DMBMX.XXX.XXXDL
Designer	xxx		INNOVPOWER
Reviewed	xxx	PRODUCT. XXX	
Process Reviewed	xxx		
Standardized	xxx	PROPRIETARY INFORMATION This document must not be copied or reproduced in any form without the prior permission of INNOVPOWER	
Approved	xxx		

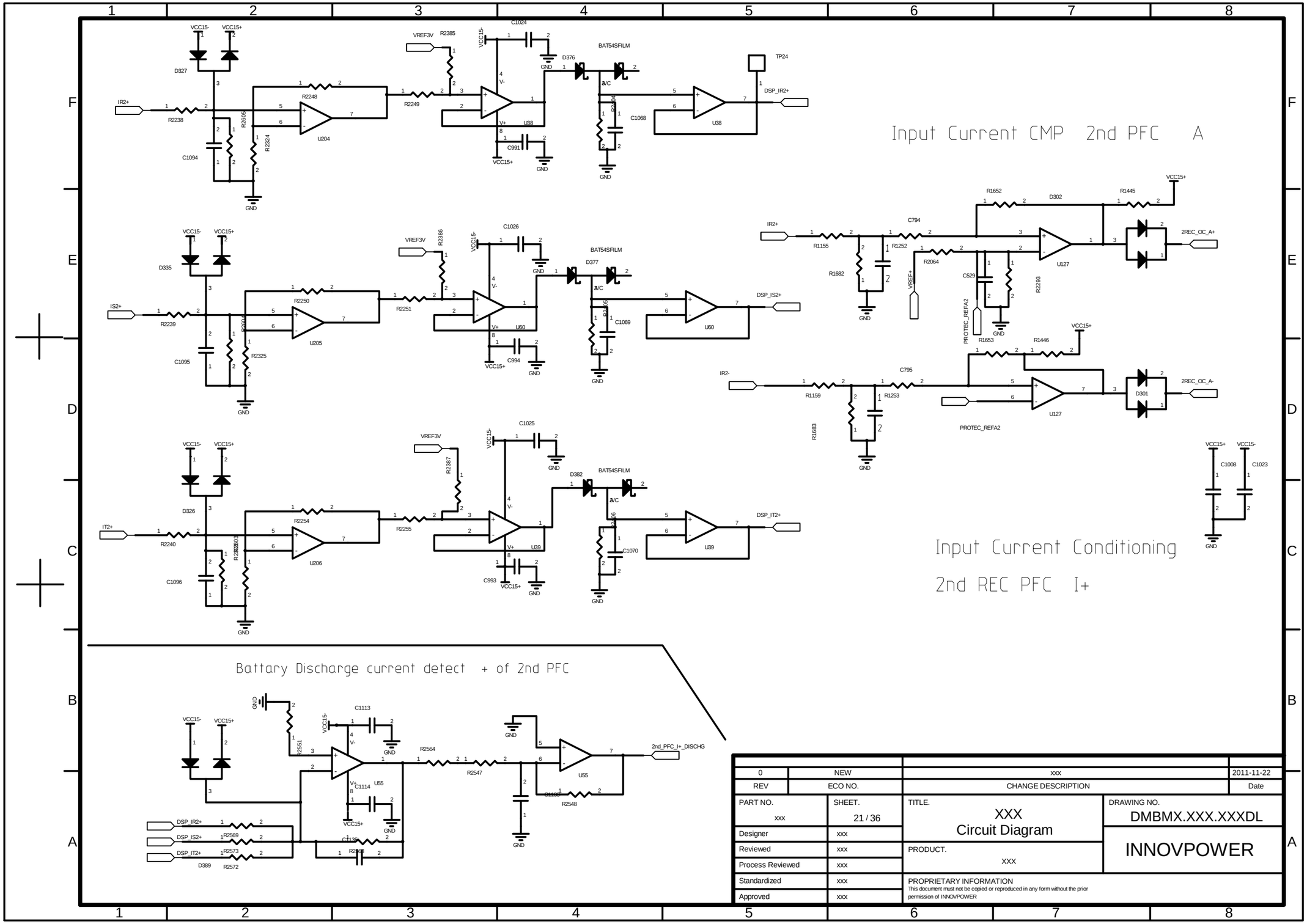

0	NEW	xxx	2011-11-22
REV	ECO NO.	CHANGE DESCRIPTION	Date

PART NO. xxx	SHEET. 21 / 36	TITLE. XXX Circuit Diagram	DRAWING NO. DMBMX.XXX.XXXDL
Designer	xxx		INNOVPOWER
Reviewed	xxx	PRODUCT. xxx	
Process Reviewed	xxx		
Standardized	xxx	PROPRIETARY INFORMATION	
Approved	xxx	This document must not be copied or reproduced in any form without the prior permission of INNOVPOWER	

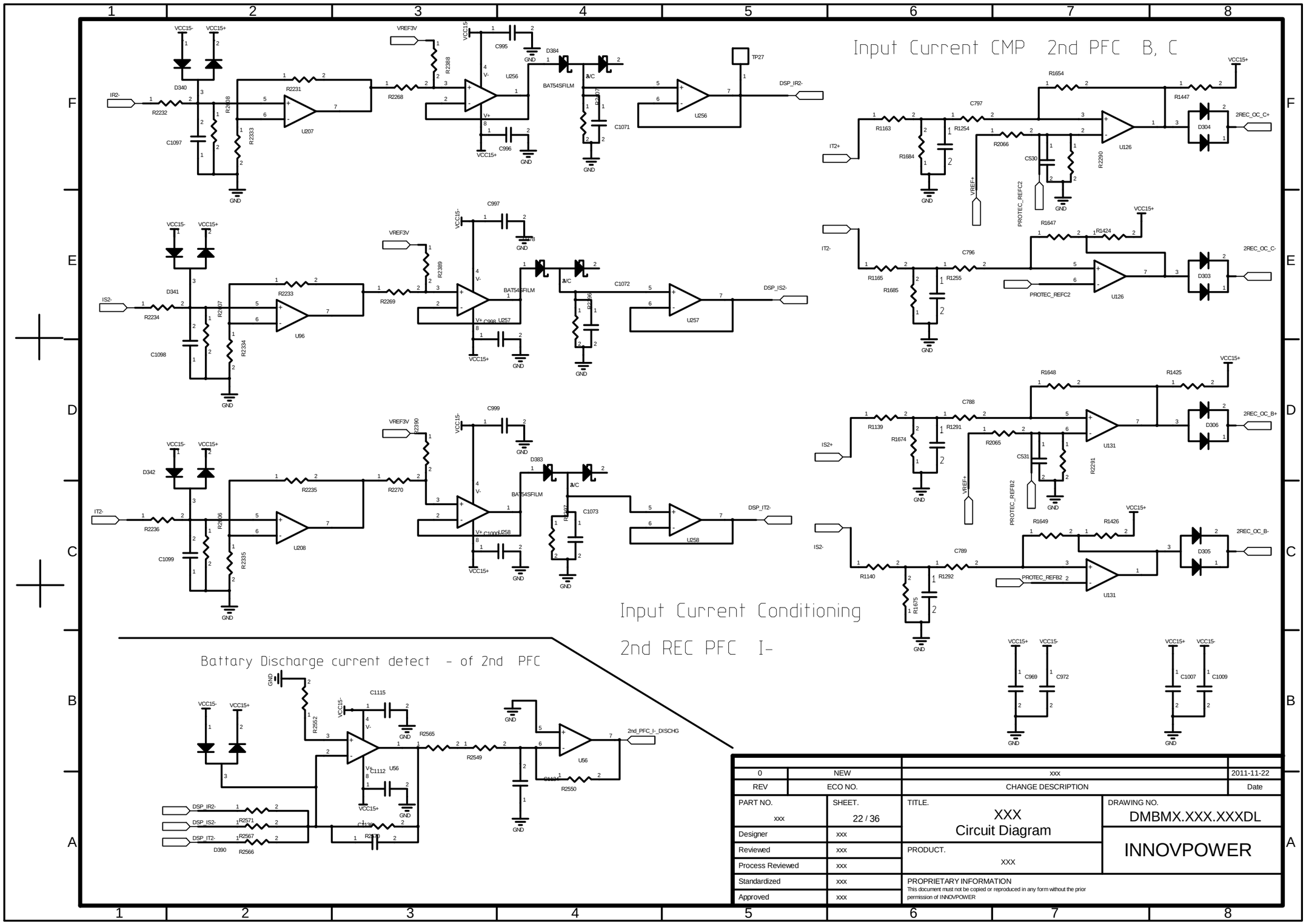

0	NEW	xxx	2011-11-22
REV	ECO NO.	CHANGE DESCRIPTION	Date

PART NO. xxx	SHEET. 22 / 36	TITLE. XXX Circuit Diagram	DRAWING NO. DMBMX.XXX.XXXDL
Designer	xxx		INNOVPOWER
Reviewed	xxx	PRODUCT. XXX	
Process Reviewed	xxx		
Standardized	xxx	PROPRIETARY INFORMATION This document must not be copied or reproduced in any form without the prior permission of INNOVPOWER	
Approved	xxx		

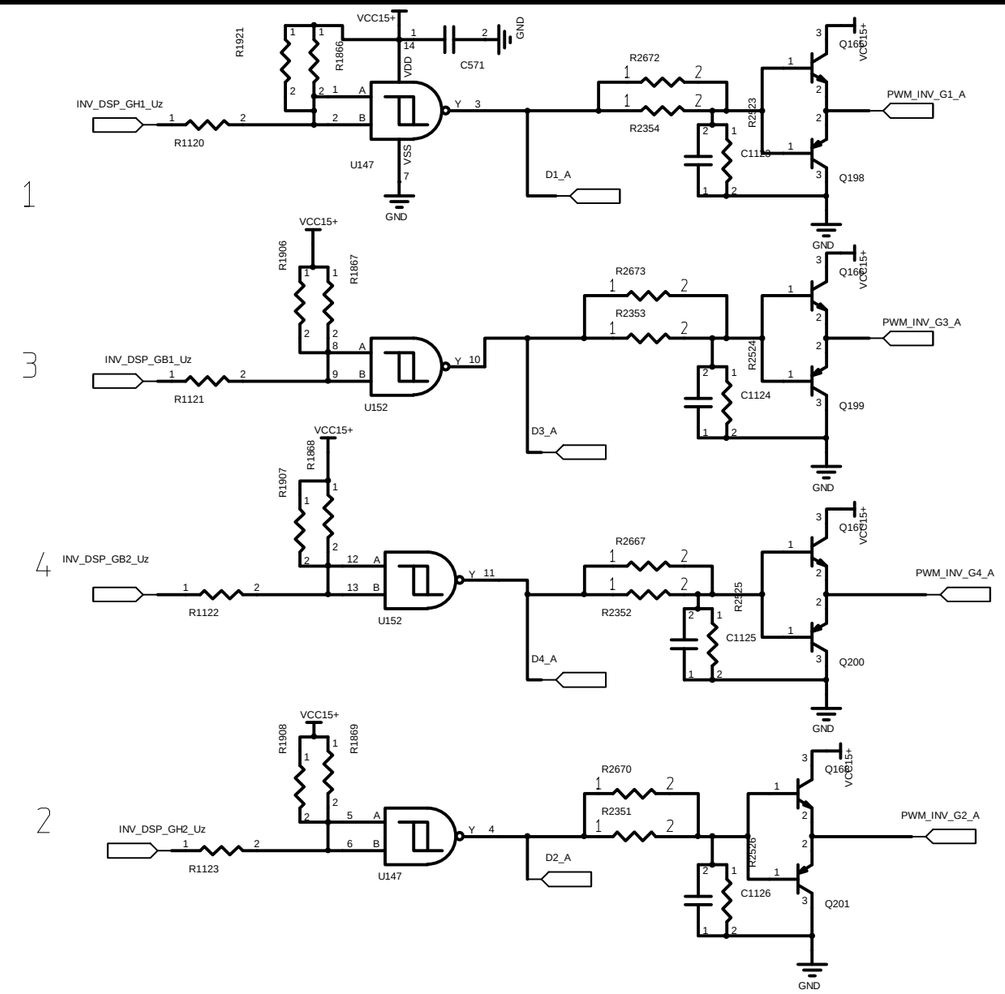

GH1---Q1

GH2---Q2

GB1---Q3

GB2---Q4

Inv Phase A

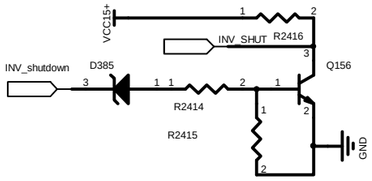

INV PWM PULSE BY PULSE LIMIT

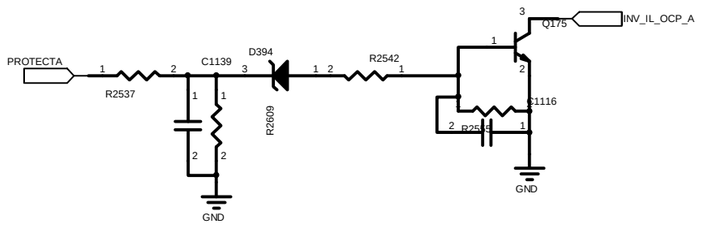

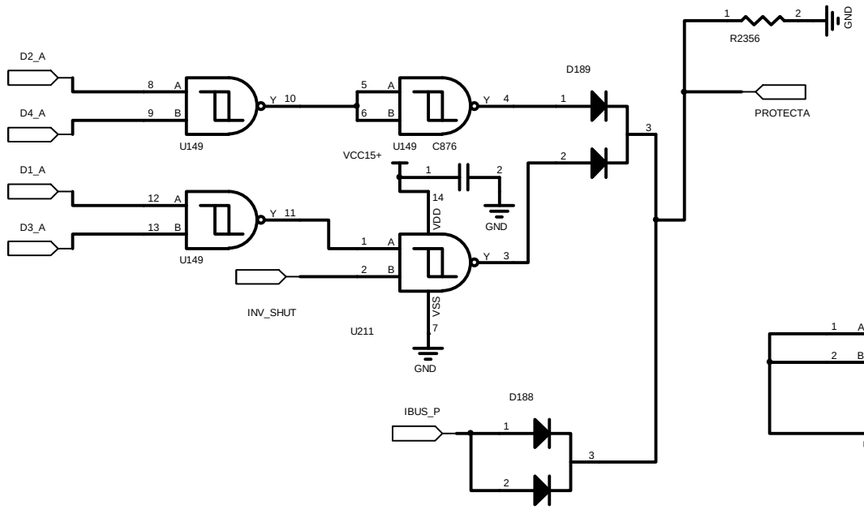

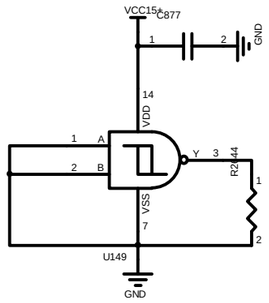

0	NEW	xxx	2011-11-22
REV	ECO NO.	CHANGE DESCRIPTION	Date

PART NO. xxx	SHEET. 23 / 36	TITLE. XXX Circuit Diagram	DRAWING NO. DMBMX.XXX.XXXDL
Designer	xxx		INNOVPOWER
Reviewed	xxx	PRODUCT. XXX	
Process Reviewed	xxx		
Standardized	xxx	PROPRIETARY INFORMATION	
Approved	xxx	This document must not be copied or reproduced in any form without the prior permission of INNOVPOWER	

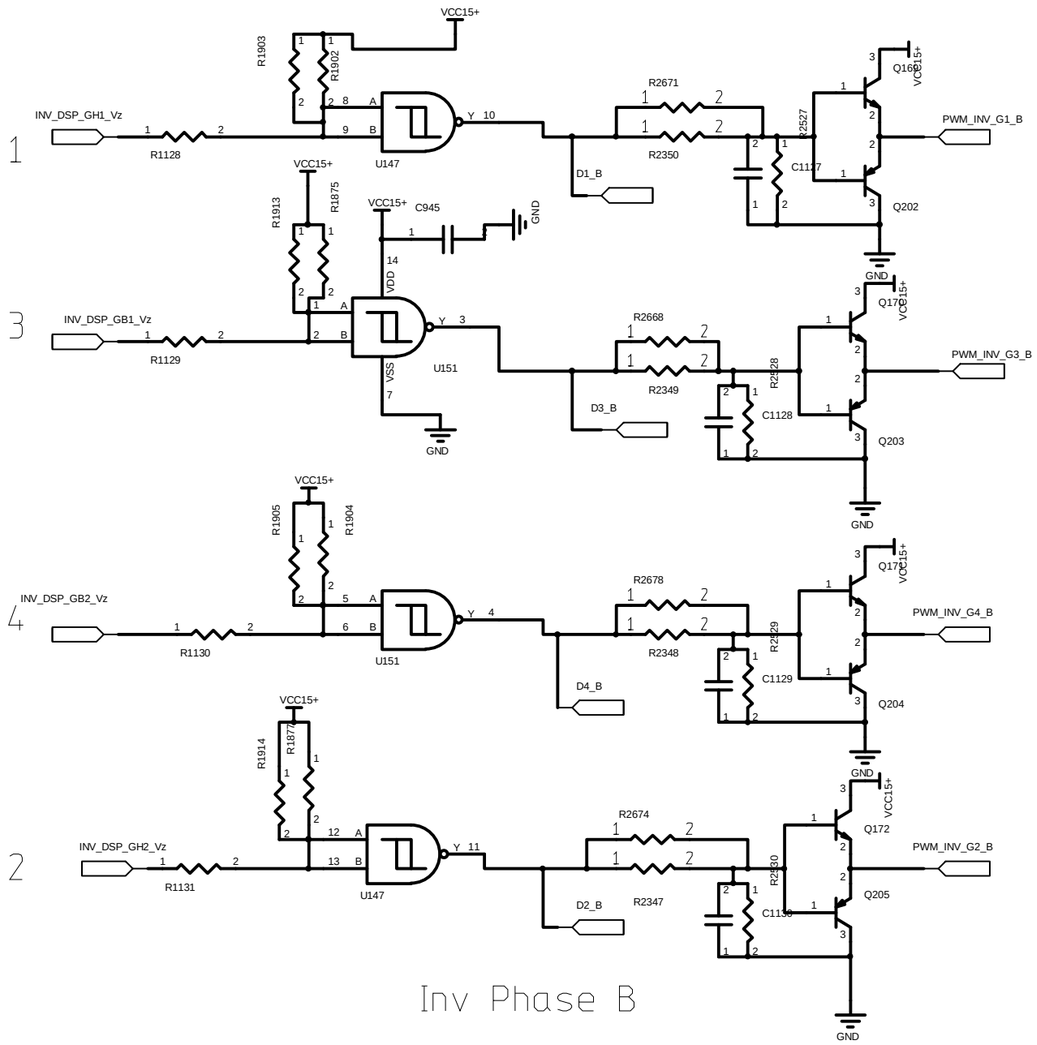

Inv Phase B

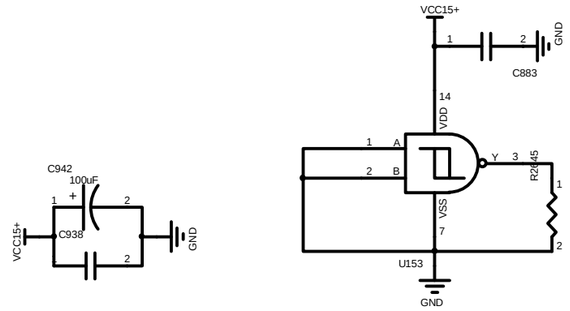

Module Over Tempreture Detect

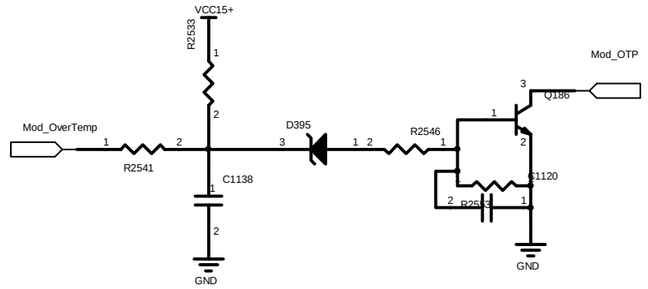

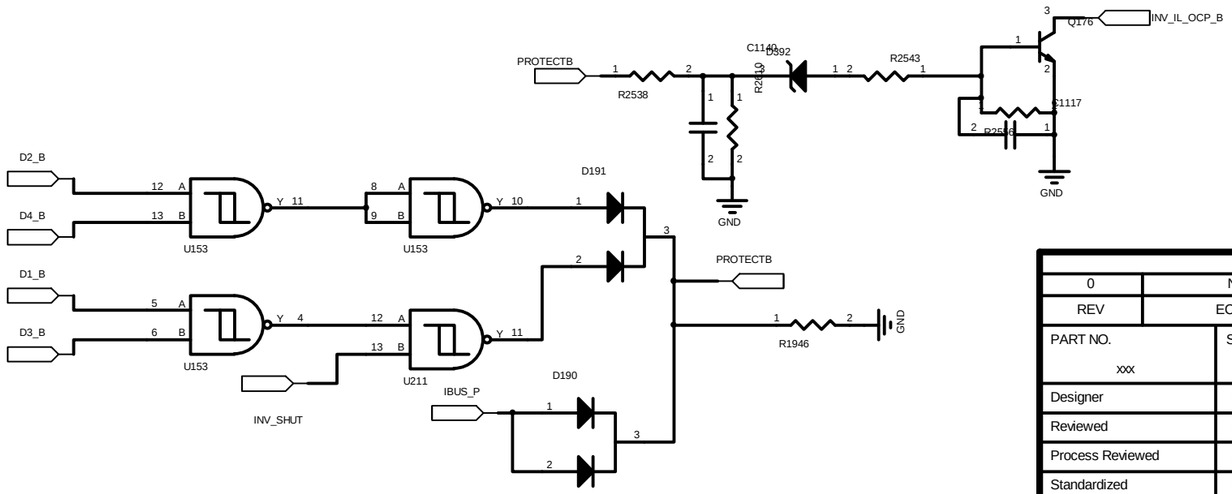

0	NEW	xxx	2011-11-22
REV	ECO NO.	CHANGE DESCRIPTION	Date
PART NO. xxx	SHEET. 24 / 36	TITLE. XXX Circuit Diagram	DRAWING NO. DMBMX.XXX.XXXDL
Designer	xxx		INNOVPOWER
Reviewed	xxx	PRODUCT. XXX	
Process Reviewed	xxx		
Standardized	xxx	PROPRIETARY INFORMATION	
Approved	xxx	This document must not be copied or reproduced in any form without the prior permission of INNOVPOWER	

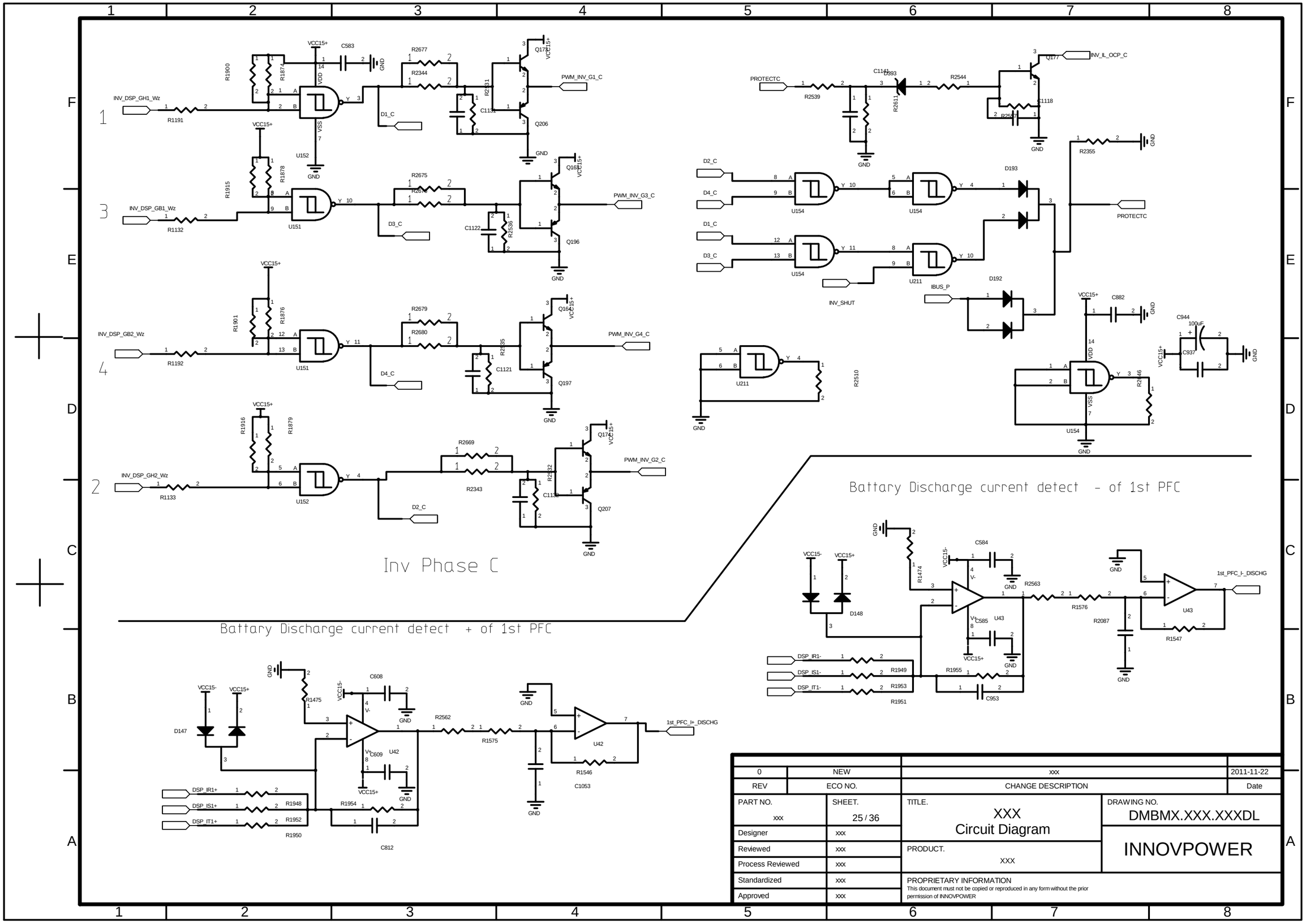

0	NEW	xxx	2011-11-22
REV	ECO NO.	CHANGE DESCRIPTION	Date

PART NO. xxx	SHEET. 25 / 36	TITLE. XXX Circuit Diagram	DRAWING NO. DMBMX.XXX.XXXDL
Designer	xxx		INNOVPOWER
Reviewed	xxx	PRODUCT. XXX	
Process Reviewed	xxx		
Standardized	xxx	PROPRIETARY INFORMATION	
Approved	xxx	This document must not be copied or reproduced in any form without the prior permission of INNOVPOWER	

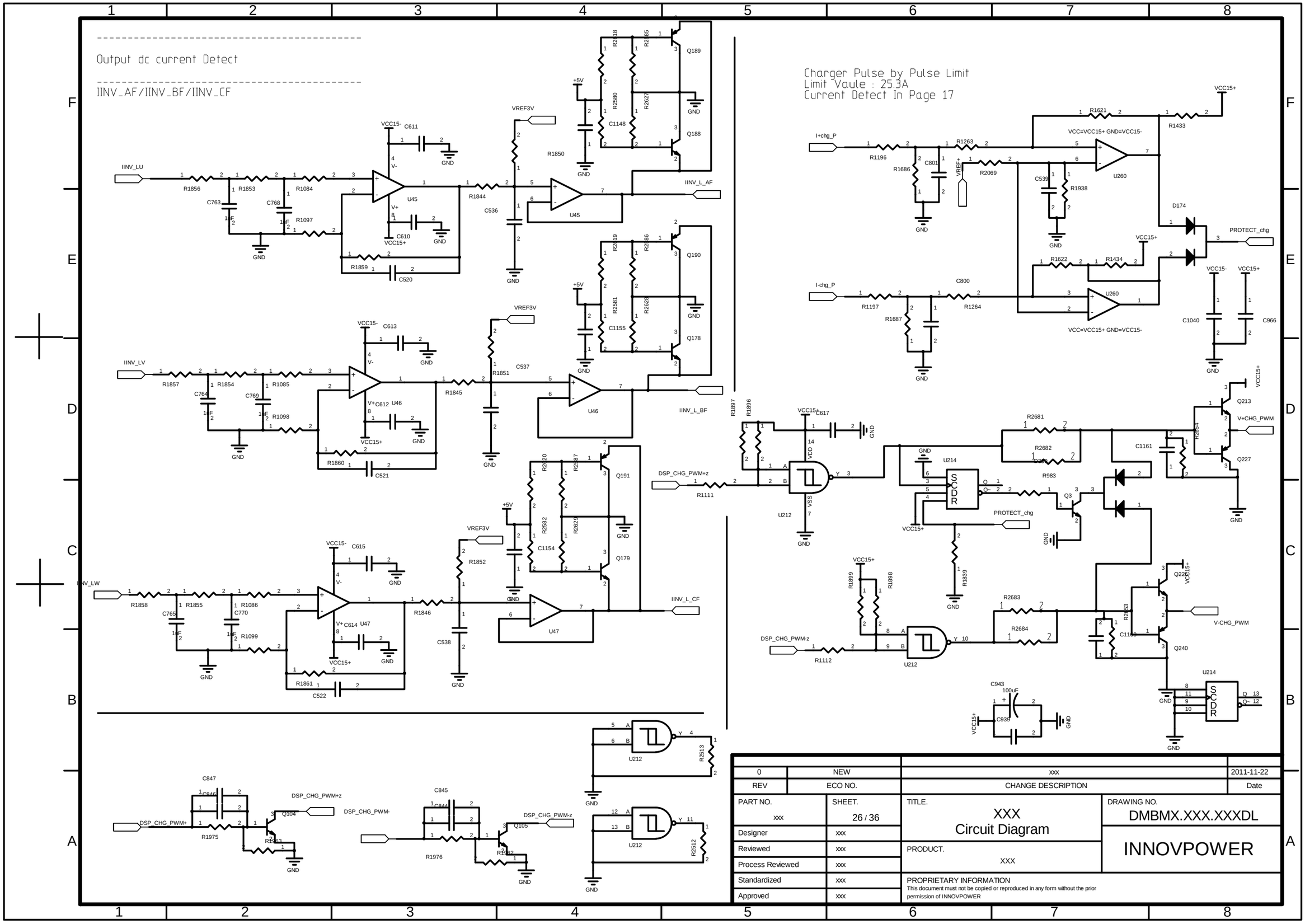

0	NEW	xxx	2011-11-22
REV	ECO NO.	CHANGE DESCRIPTION	Date

PART NO. xxx	SHEET. 26 / 36	TITLE. XXX Circuit Diagram	DRAWING NO. DMBMX.XXX.XXXDL
Designer	xxx		INNOVPOWER
Reviewed	xxx	PRODUCT. XXX	
Process Reviewed	xxx		
Standardized	xxx	PROPRIETARY INFORMATION	
Approved	xxx	This document must not be copied or reproduced in any form without the prior permission of INNOVPOWER	

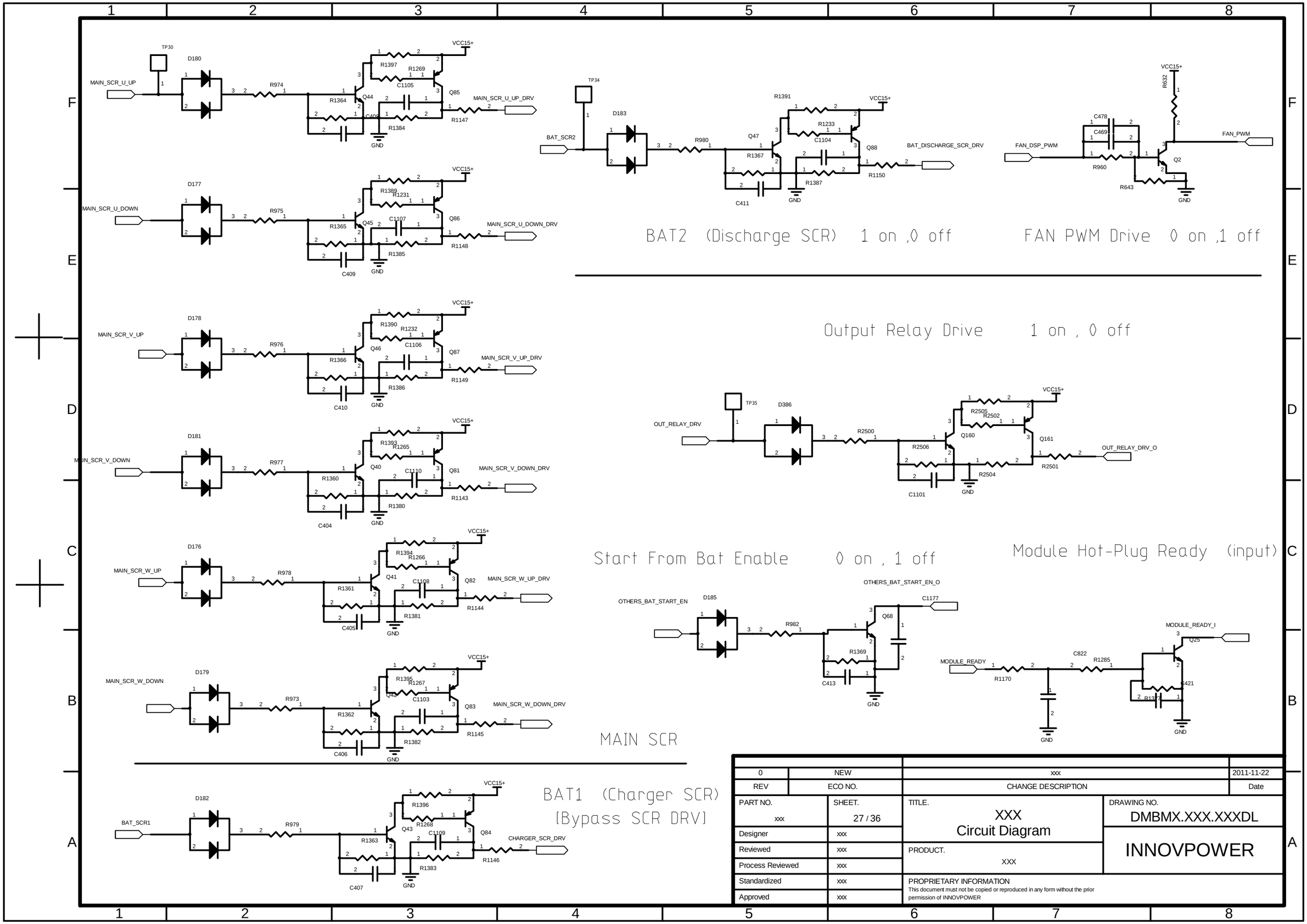

0	NEW	xxx	2011-11-22
REV	ECO NO.	CHANGE DESCRIPTION	Date

PART NO. xxx	SHEET. 27 / 36	TITLE. XXX Circuit Diagram	DRAWING NO. DMBMX.XXX.XXXDL
Designer	xxx		INNOVPOWER
Reviewed	xxx	PRODUCT. XXX	
Process Reviewed	xxx		
Standardized	xxx	PROPRIETARY INFORMATION This document must not be copied or reproduced in any form without the prior permission of INNOVPOWER	
Approved	xxx		

SoftStart Relay Drive (output)

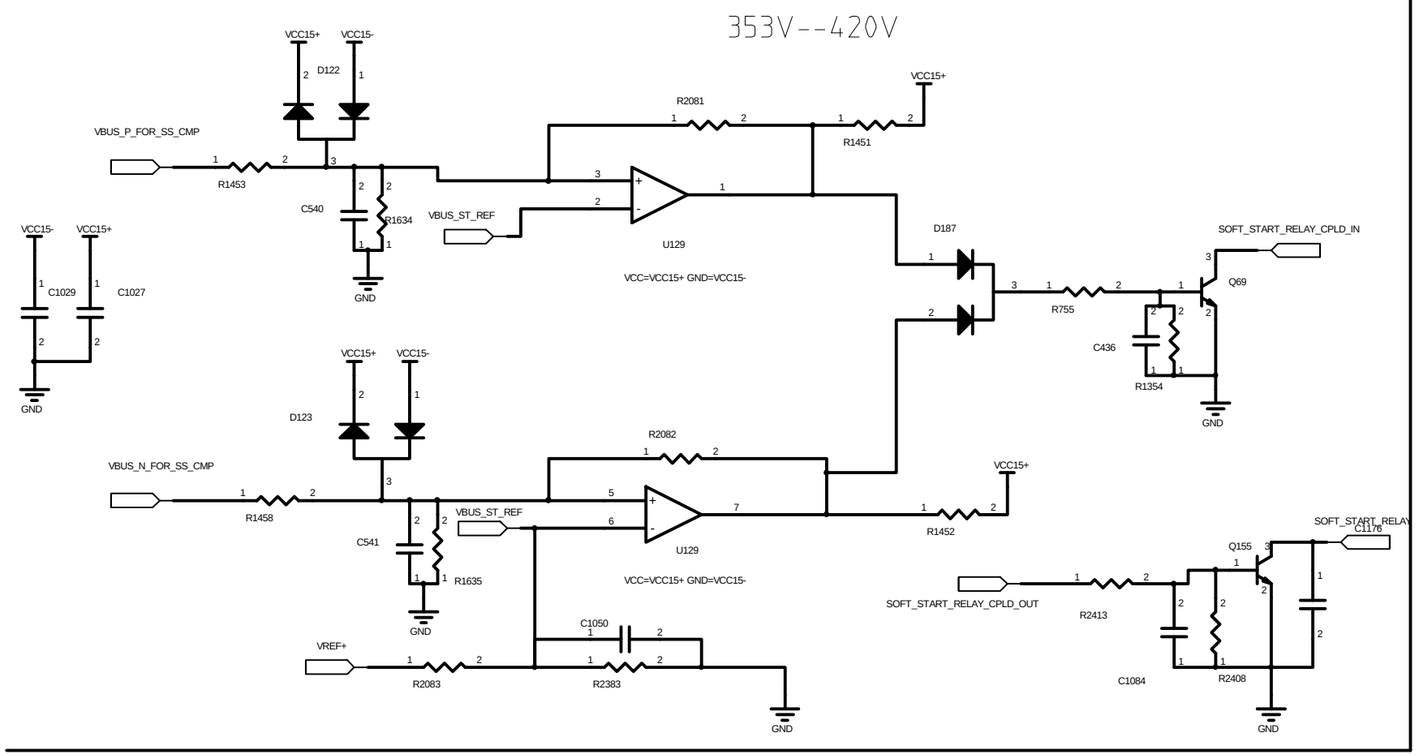

Fuse Fault (input)

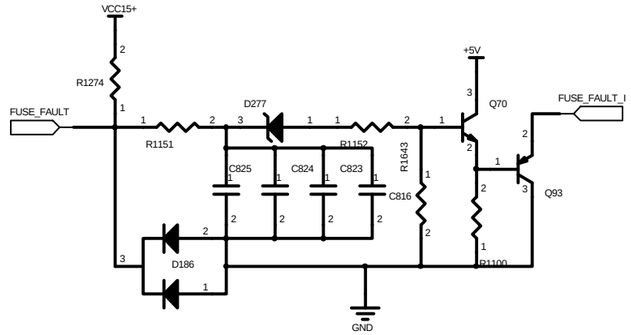

Bat-Earth Short Fault (input)

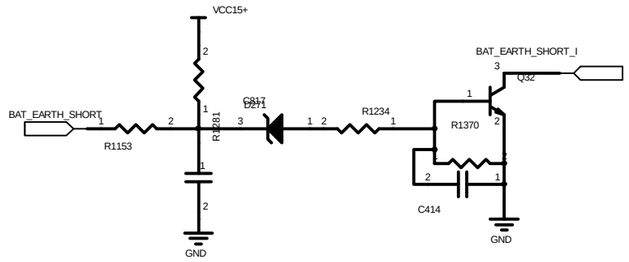

Power Fault (input) 5.1V---Fault, 0V---OK

Bypass Feedback Reserved Input

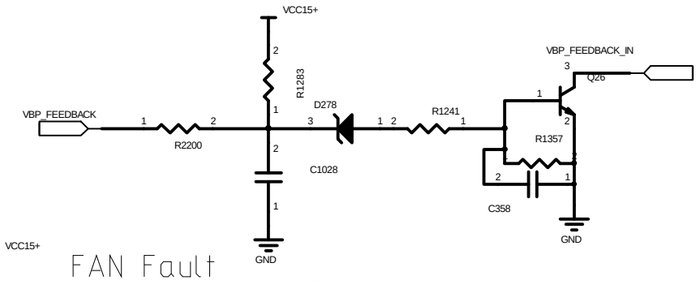

Bypass Feedback Action Reserved

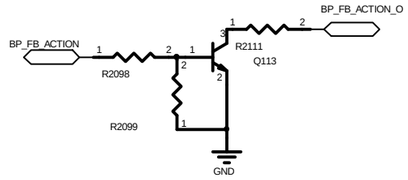

FAN Fault

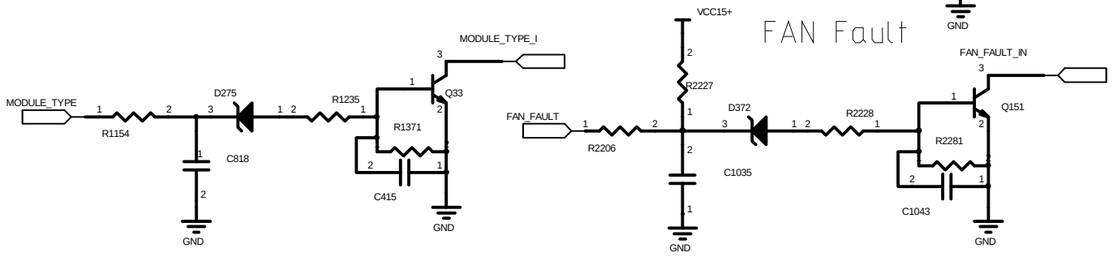

Module Type Select (PowerModule Or BypassModule)

0	NEW	xxx	2011-11-22
REV	ECO NO.	CHANGE DESCRIPTION	Date

PART NO. xxx	SHEET. 28 / 36	TITLE. XXX Circuit Diagram	DRAWING NO. DMBMX.XXX.XXXDL
Designer	xxx		INNOVPOWER
Reviewed	xxx	PRODUCT. XXX	
Process Reviewed	xxx		
Standardized	xxx	PROPRIETARY INFORMATION	
Approved	xxx	This document must not be copied or reproduced in any form without the prior permission of INNOVPOWER	

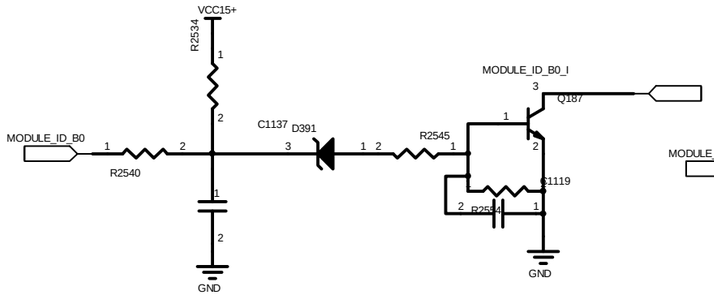

Module ID B0

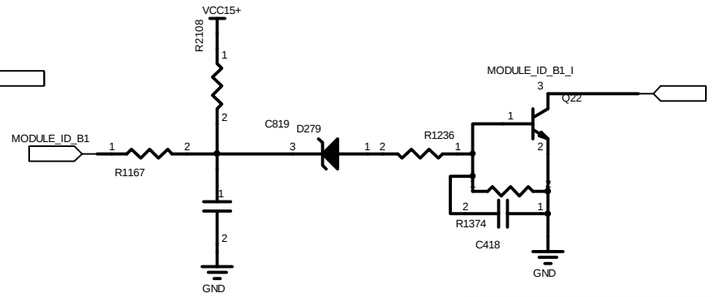

Module ID B1

Module ID Input

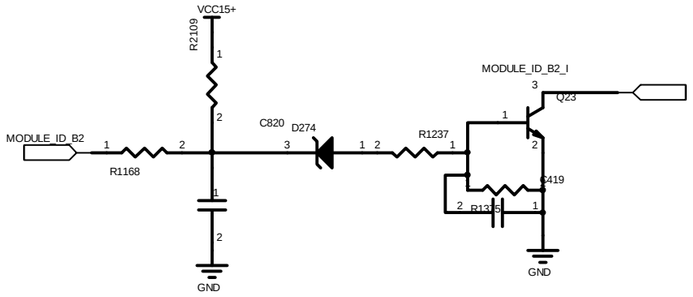

Module ID B2

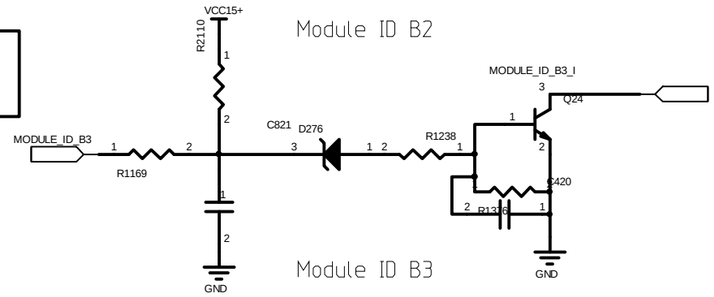

Module ID B3

REC

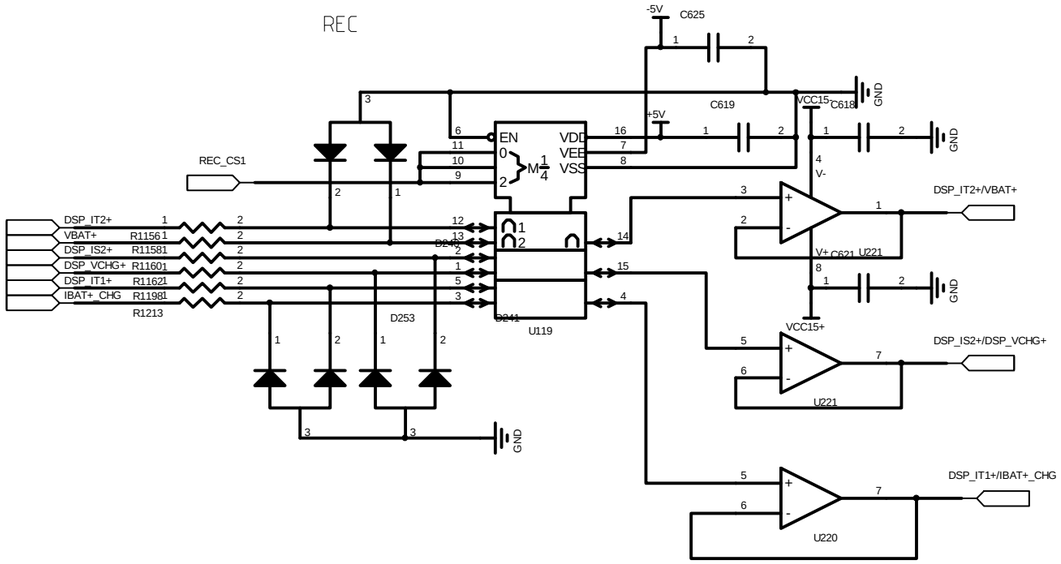

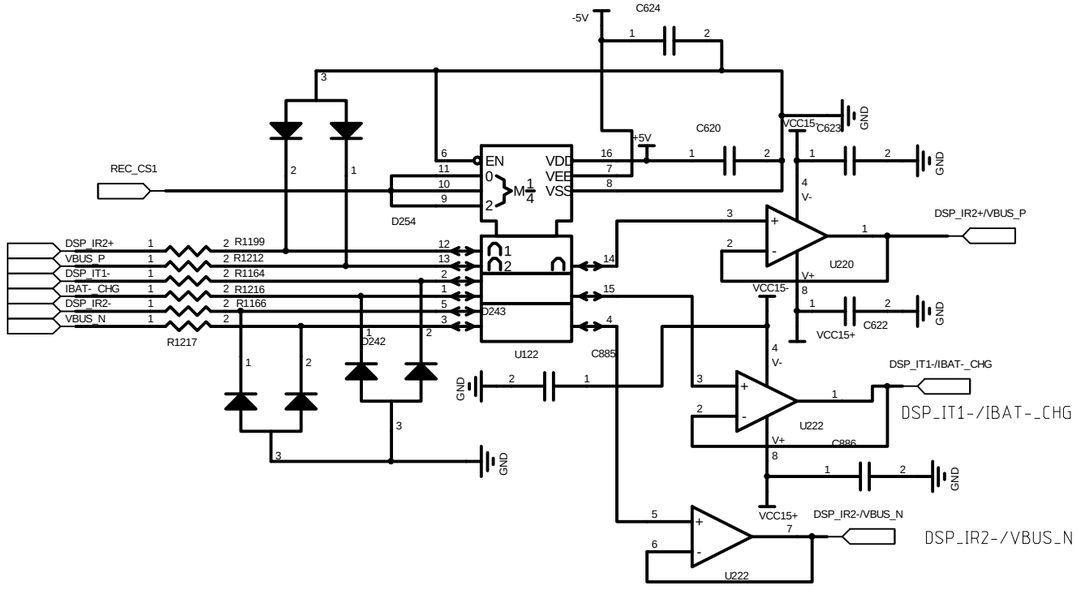

Module Function For LED Display (output)

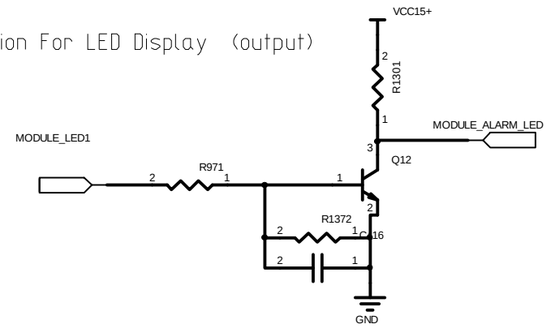

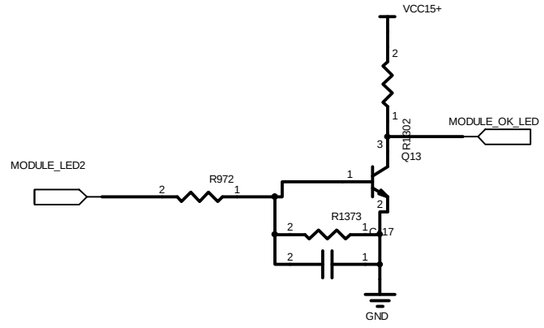

REV	ECO NO.	CHANGE DESCRIPTION	Date
0	NEW	xxx	2011-11-22

PART NO. xxx	SHEET. 29 / 36	TITLE. XXX Circuit Diagram	DRAWING NO. DMBMX.XXX.XXXDL
Designer	xxx		INNOVPOWER
Reviewed	xxx	PRODUCT. XXX	
Process Reviewed	xxx		
Standardized	xxx	PROPRIETARY INFORMATION This document must not be copied or reproduced in any form without the prior permission of INNOVPOWER	
Approved	xxx		

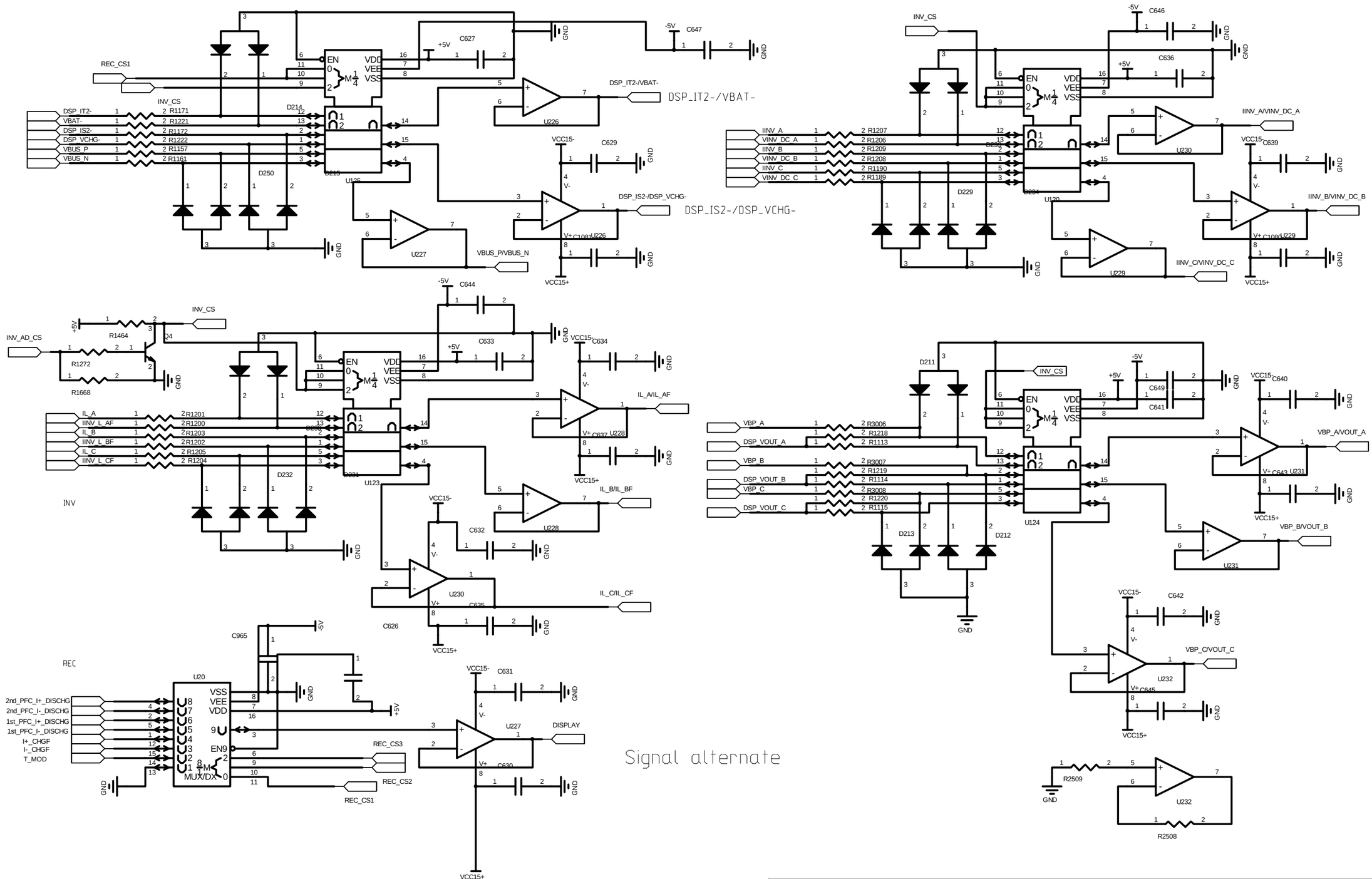

REV	ECO NO.	CHANGE DESCRIPTION	Date
0	NEW	xxx	2011-11-22

PART NO. xxx	SHEET. 30 / 36	TITLE. XXX Circuit Diagram	DRAWING NO. DMBMX.XXX.XXXDL
Designer	xxx		
Reviewed	xxx	PRODUCT. XXX	INNOVPOWER
Process Reviewed	xxx		
Standardized	xxx	PROPRIETARY INFORMATION This document must not be copied or reproduced in any form without the prior permission of INNOVPOWER	
Approved	xxx		

2570775DL

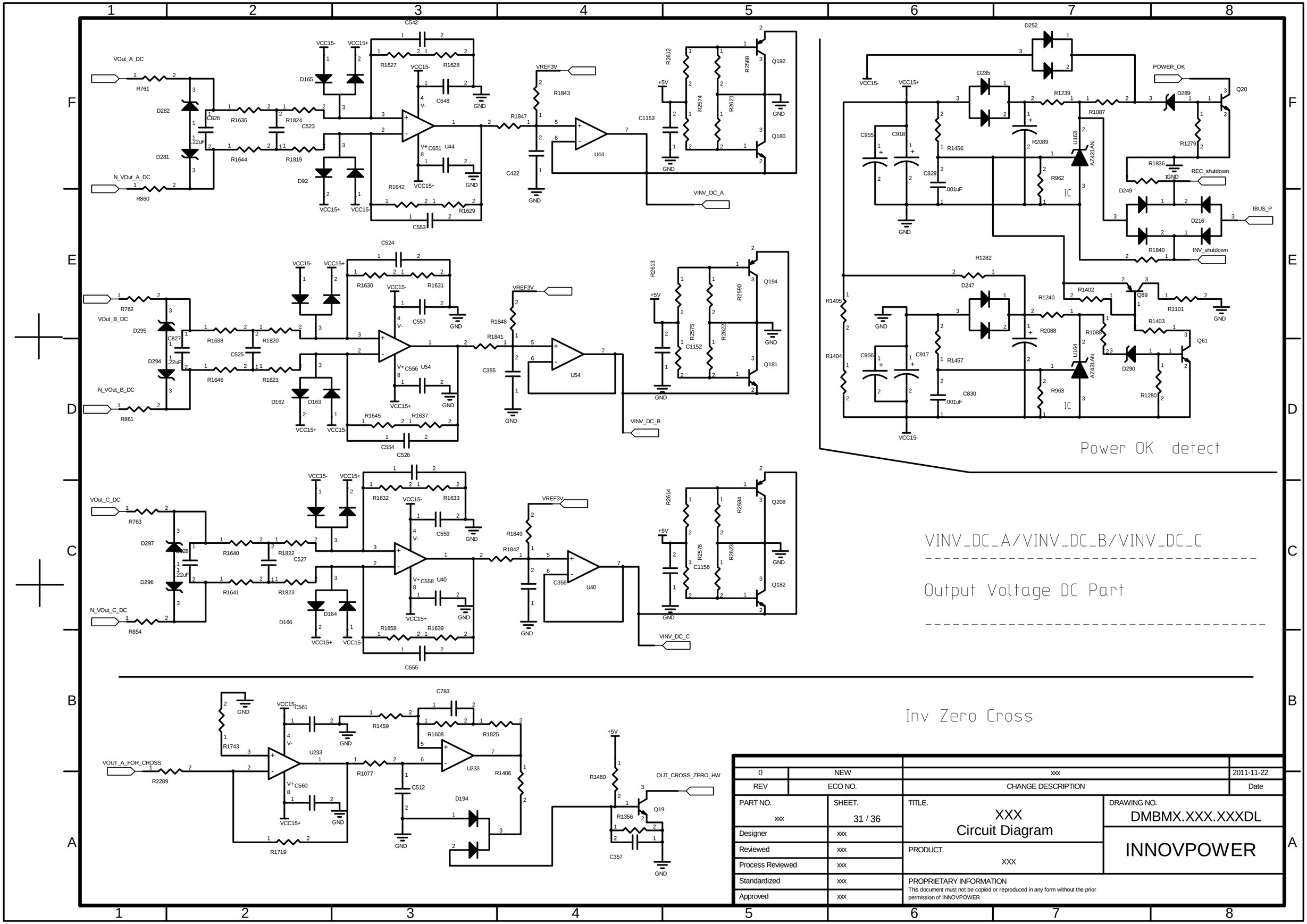

0	NEW	xxx	2011-11-22
REV	ECO NO.	CHANGE DESCRIPTION	Date

PART NO. xxx	SHEET. 31 / 36	TITLE. XXX Circuit Diagram	DRAWING NO. DMBMX.XXX.XXXDL
Designer	xxx		INNOVPOWER
Reviewed	xxx	PRODUCT. XXX	
Process Reviewed	xxx		
Standardized	xxx	PROPRIETARY INFORMATION This document must not be copied or reproduced in any form without the prior permission of INNOVPOWER	
Approved	xxx		

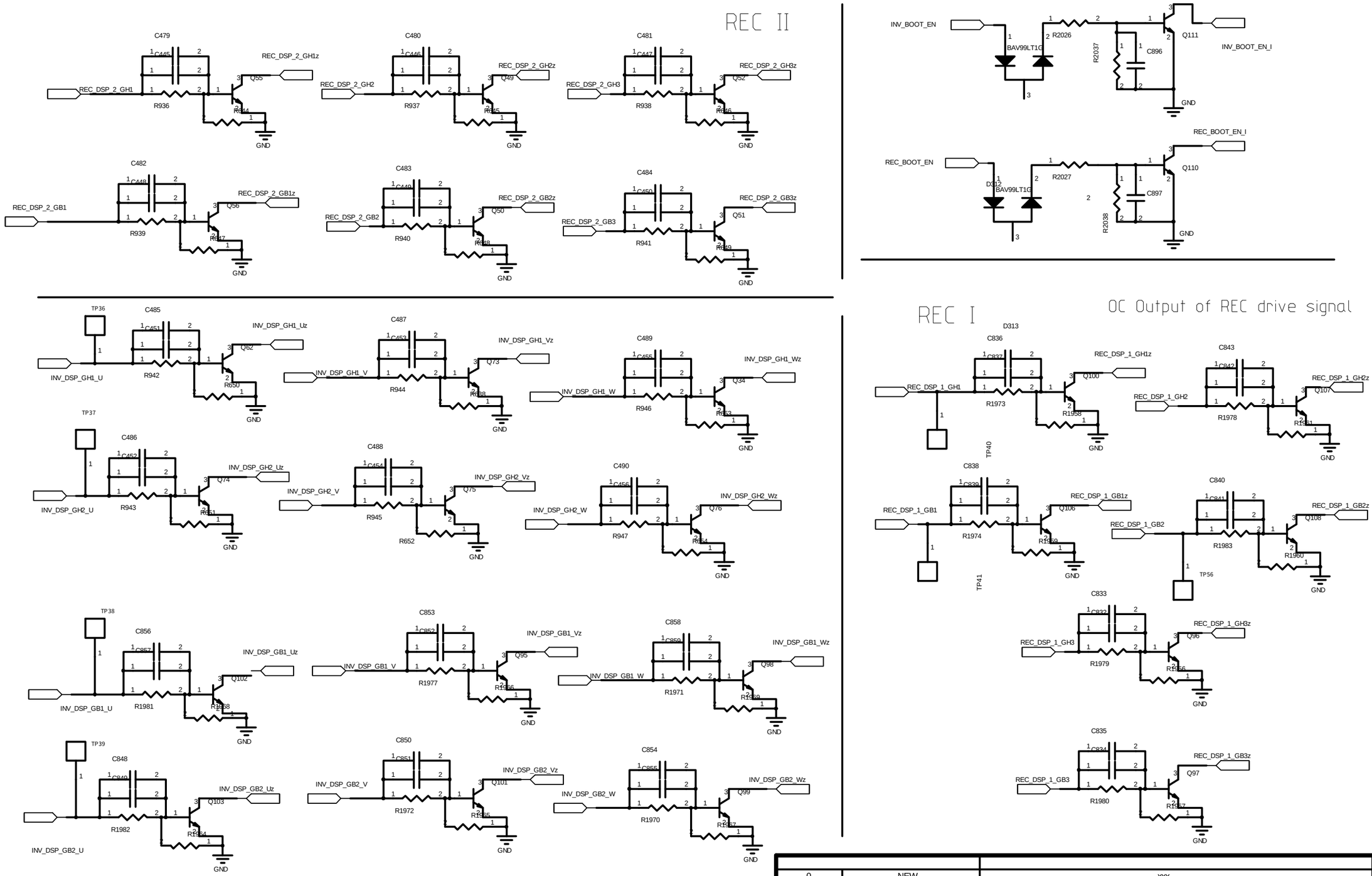

REV	ECO NO.	CHANGE DESCRIPTION	Date
0	NEW	xxx	2011-11-22

PART NO. xxx	SHEET. 32 / 36	TITLE. XXX Circuit Diagram	DRAWING NO. DMBMX.XXX.XXXDL
Designer	xxx		INNOVPOWER
Reviewed	xxx	PRODUCT. XXX	
Process Reviewed	xxx		
Standardized	xxx	PROPRIETARY INFORMATION This document must not be copied or reproduced in any form without the prior permission of INNOVPOWER	
Approved	xxx		

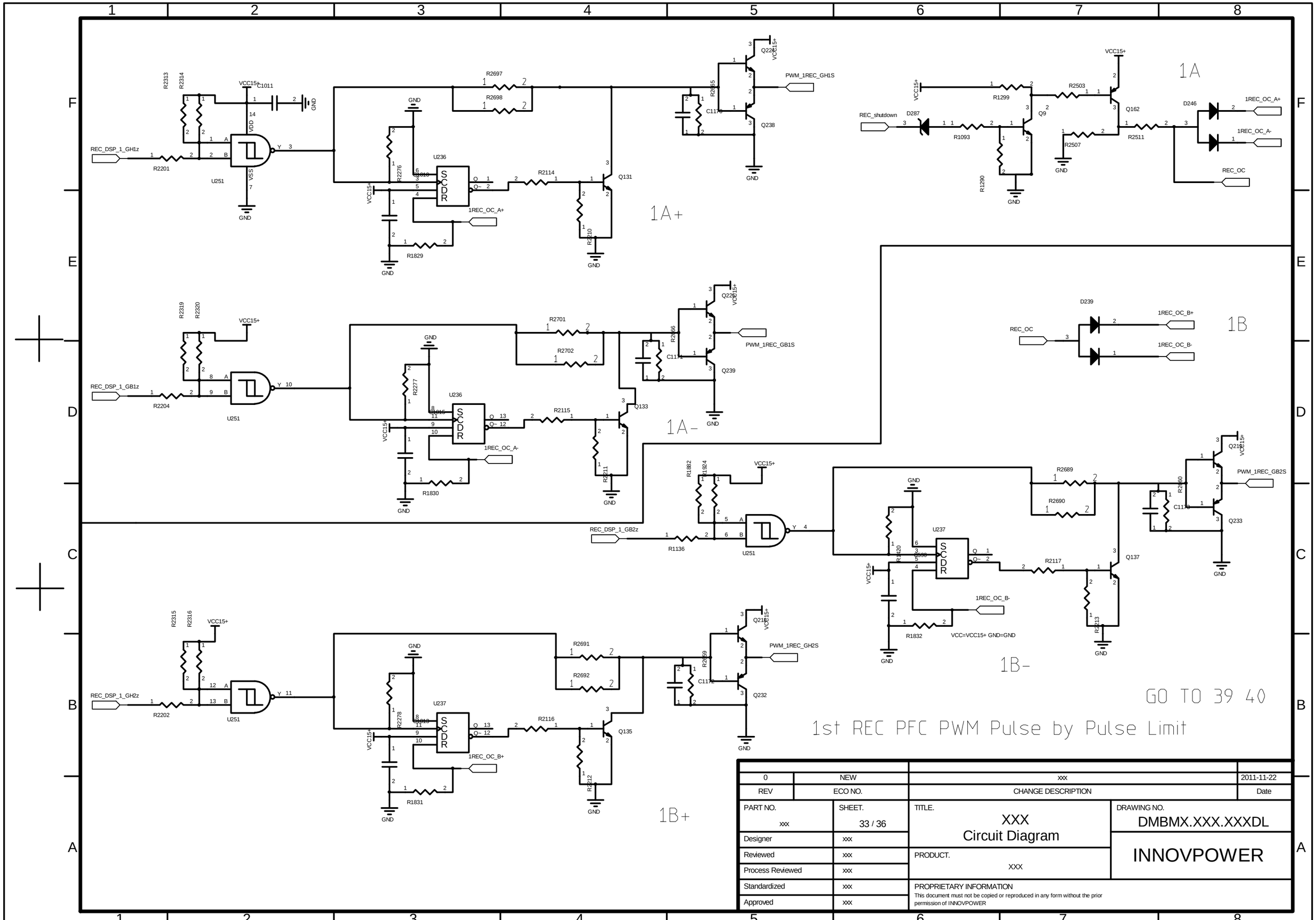

REV	ECO NO.	CHANGE DESCRIPTION	Date
0	NEW	xxx	2011-11-22

PART NO. xxx	SHEET. 33 / 36	TITLE. XXX Circuit Diagram	DRAWING NO. DMBMX.XXX.XXXDL
Designer	xxx		INNOVPOWER
Reviewed	xxx	PRODUCT. XXX	
Process Reviewed	xxx		
Standardized	xxx	PROPRIETARY INFORMATION	
Approved	xxx	This document must not be copied or reproduced in any form without the prior permission of INNOVPOWER	

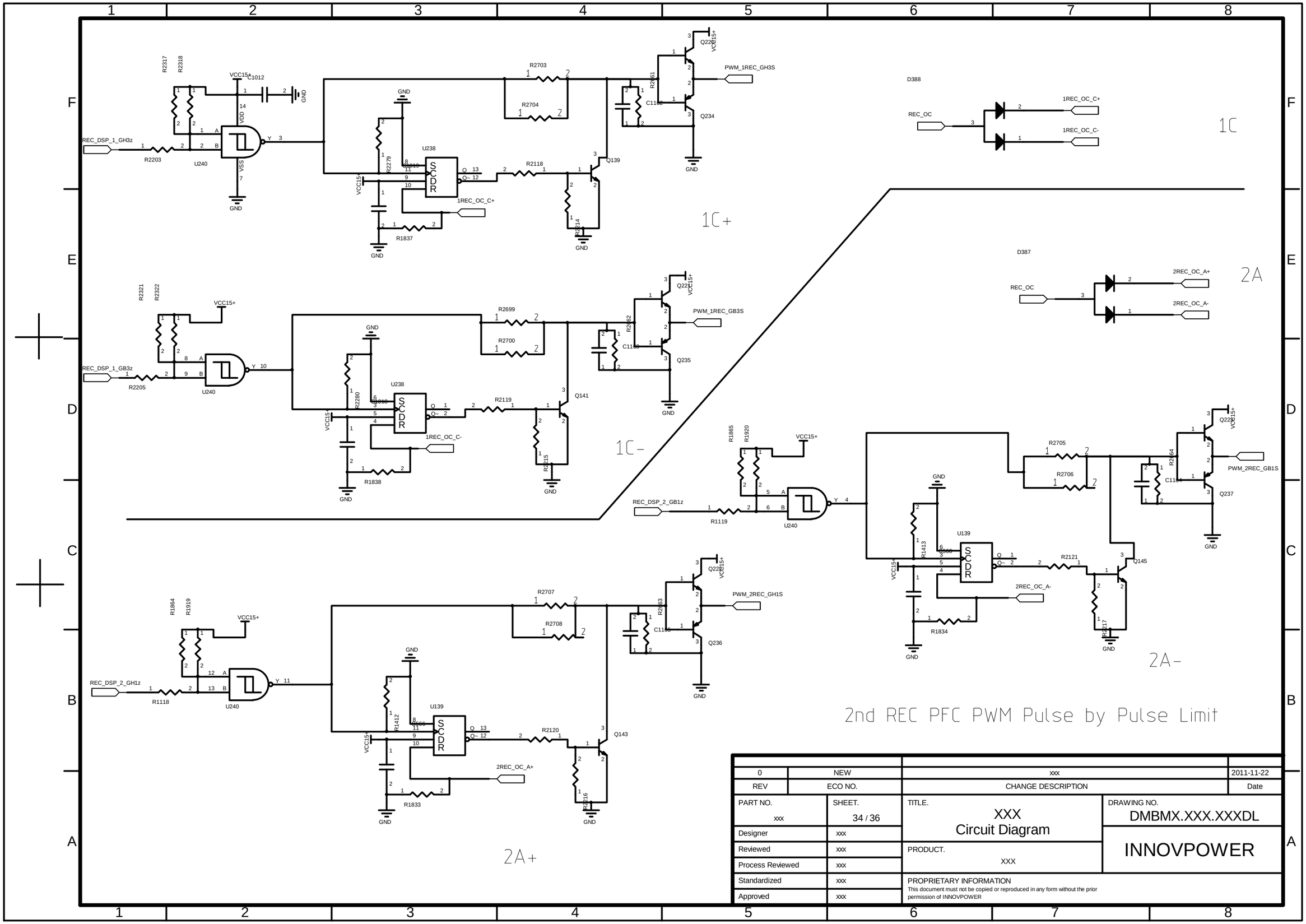

0	NEW	xxx	2011-11-22
REV	ECO NO.	CHANGE DESCRIPTION	Date
PART NO. xxx	SHEET. 34 / 36	TITLE. XXX Circuit Diagram	DRAWING NO. DMBMX.XXX.XXXDL
Designer	xxx		INNOVPOWER
Reviewed	xxx	PRODUCT. XXX	
Process Reviewed	xxx		
Standardized	xxx	PROPRIETARY INFORMATION	
Approved	xxx	This document must not be copied or reproduced in any form without the prior permission of INNOVPOWER	

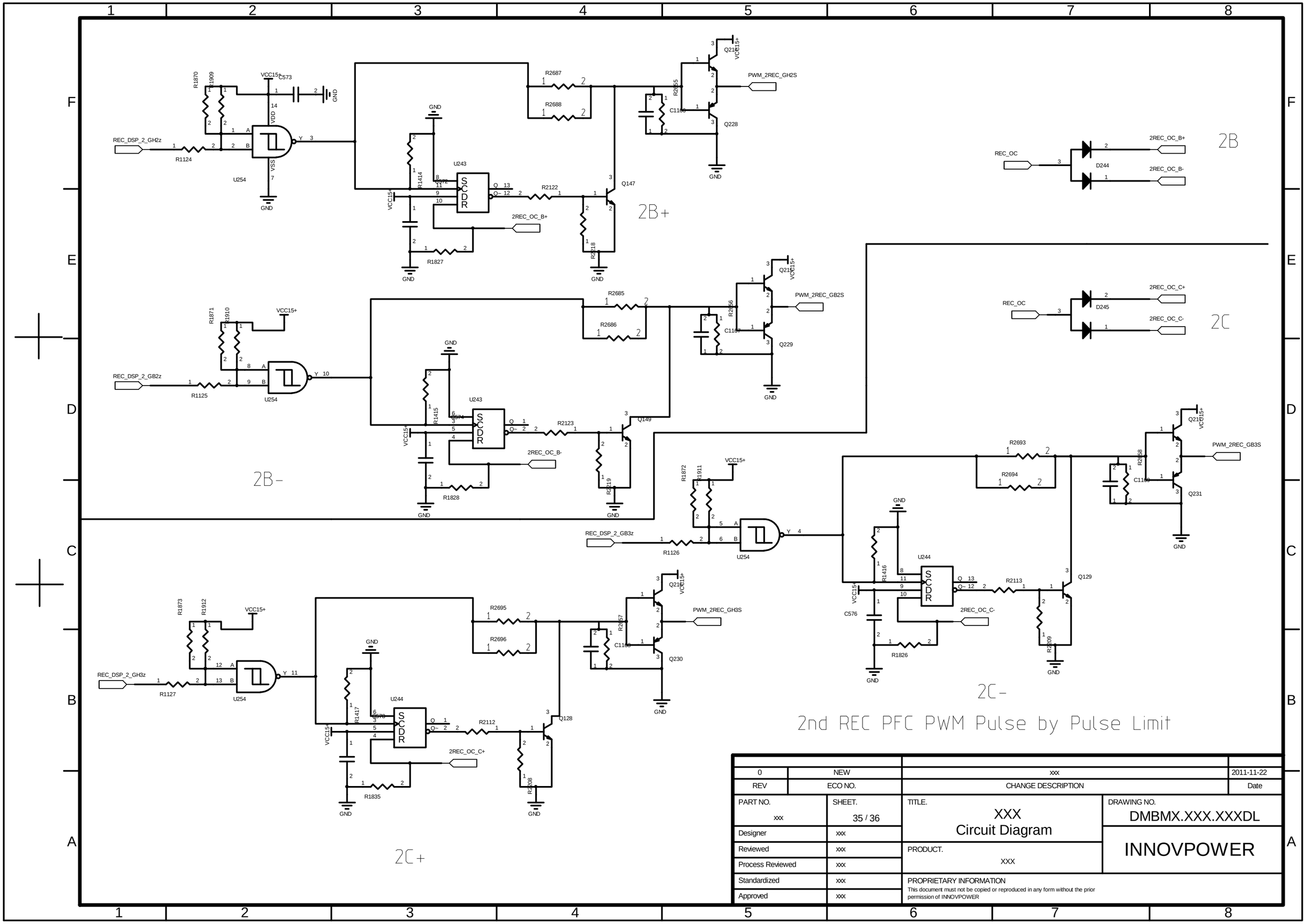

0	NEW	xxx	2011-11-22
REV	ECO NO.	CHANGE DESCRIPTION	Date

PART NO. xxx	SHEET. 35 / 36	TITLE. XXX Circuit Diagram	DRAWING NO. DMBMX.XXX.XXXDL
Designer	xxx		INNOVPOWER
Reviewed	xxx	PRODUCT. XXX	
Process Reviewed	xxx		
Standardized	xxx	PROPRIETARY INFORMATION	
Approved	xxx	This document must not be copied or reproduced in any form without the prior permission of INNOVPOWER	

24V fault

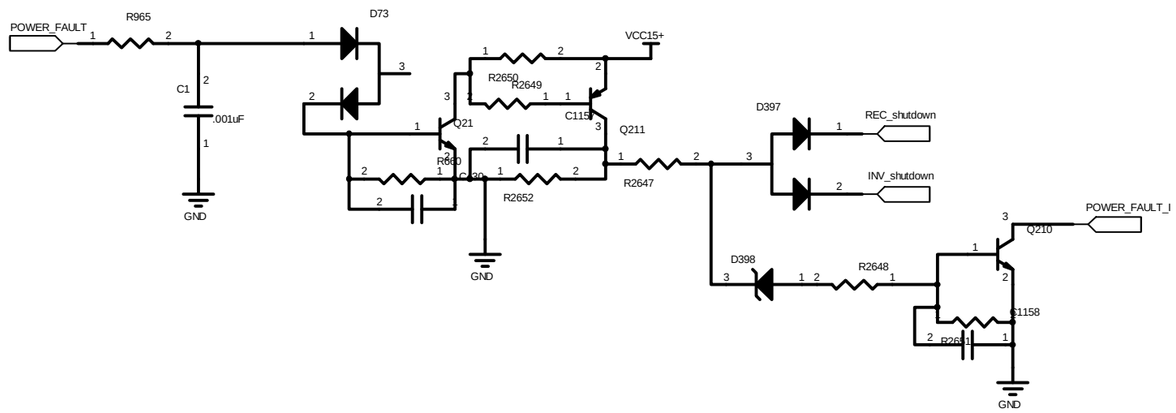

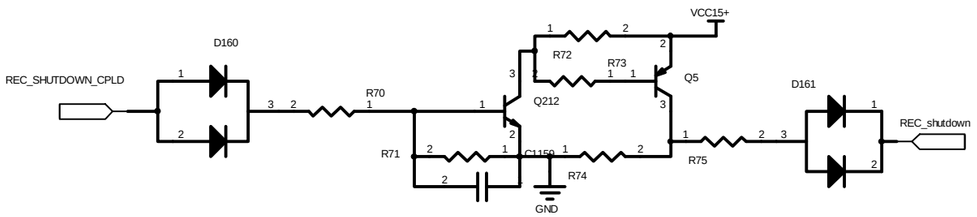

Module Tempreture Detect

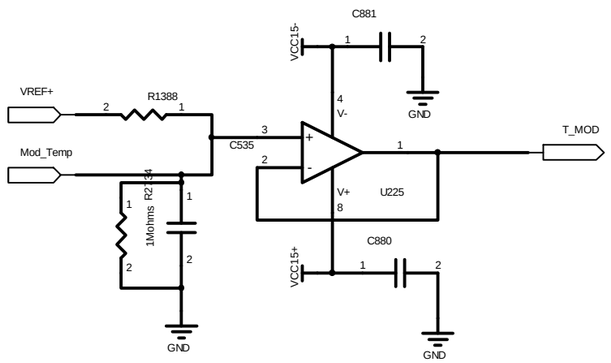

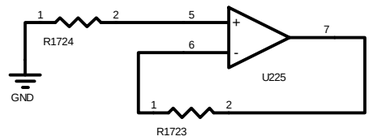

REV	ECO NO.	CHANGE DESCRIPTION	Date
0	NEW	xxx	2011-11-22

PART NO. xxx	SHEET. 36 / 36	TITLE. XXX Circuit Diagram	DRAWING NO. DMBMX.XXX.XXXDL
Designer	xxx		INNOVPOWER
Reviewed	xxx	PRODUCT. XXX	
Process Reviewed	xxx		
Standardized	xxx	PROPRIETARY INFORMATION	
Approved	xxx	This document must not be copied or reproduced in any form without the prior permission of INNOVPOWER	