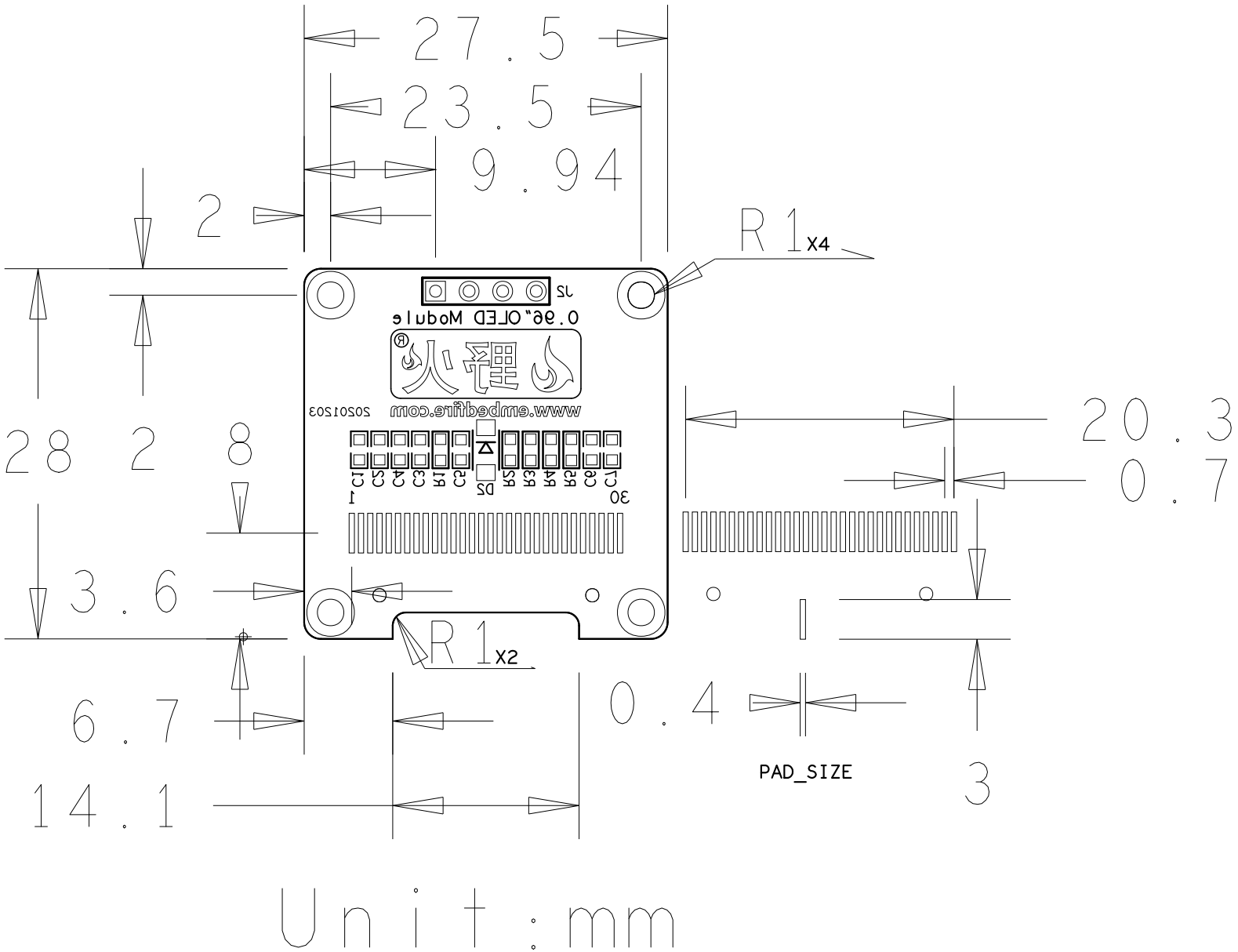
27.5
23.5
9.94
2
R1 x4
J2
0.96" OLED Module
www.embedfire.com
20200203
20.3
0.7
28.2
8
3.6
R1 x2
6.7
14.1
0.4
PAD_SIZE
3
Unit:mm