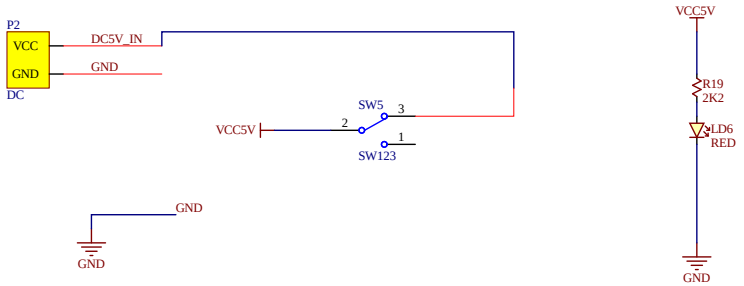

米联客 MSXBO

TechWeb:	www.uisrc.com		
ProjectName:	MZ7XB_Fun.PrjPCB		
Page Title:	15_PMU.SchDoc	Rev:	20191012
Date:	2022/6/15 - 18:44:29	Sheet 15 of 16	

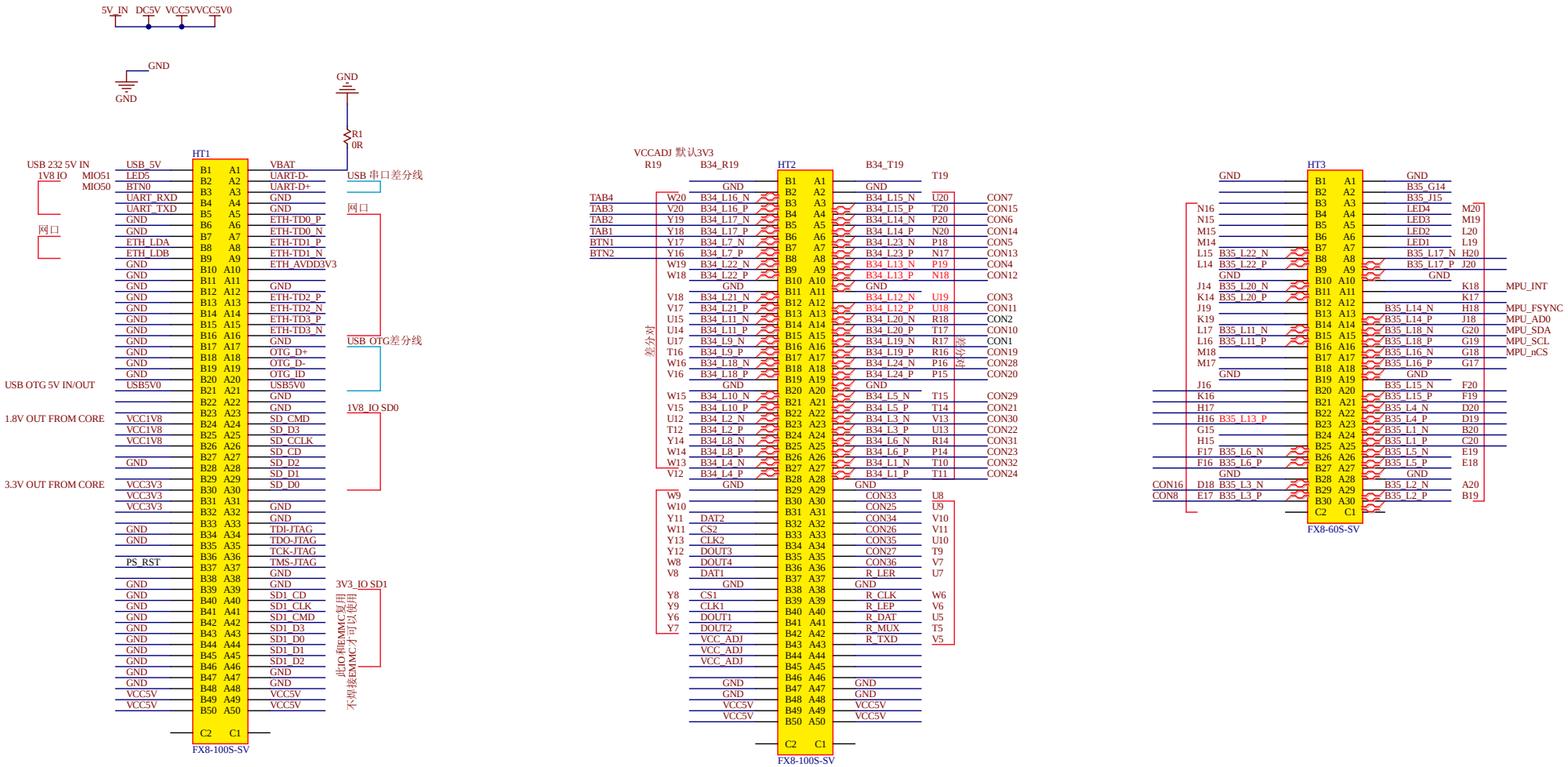

VCC5V 通过底板连接器给核心板供电

差分对命名：比如B13_L19_P,B13_L19_N代表了 BANK13上的L19对差分对

FPGA的PIN号：为字母+数字 比如 W20 就是FPGA的IO 号

米联客	MSXBO		
TechWeb:	www.uisrc.com		
ProjectName:	MZ7XB_Fun.PrjPCB		
Page Title:	02_connector.SchDoc	Rev:	20191012
Date:	2022/6/15 - 18:44:29	Sheet 2 of 16	

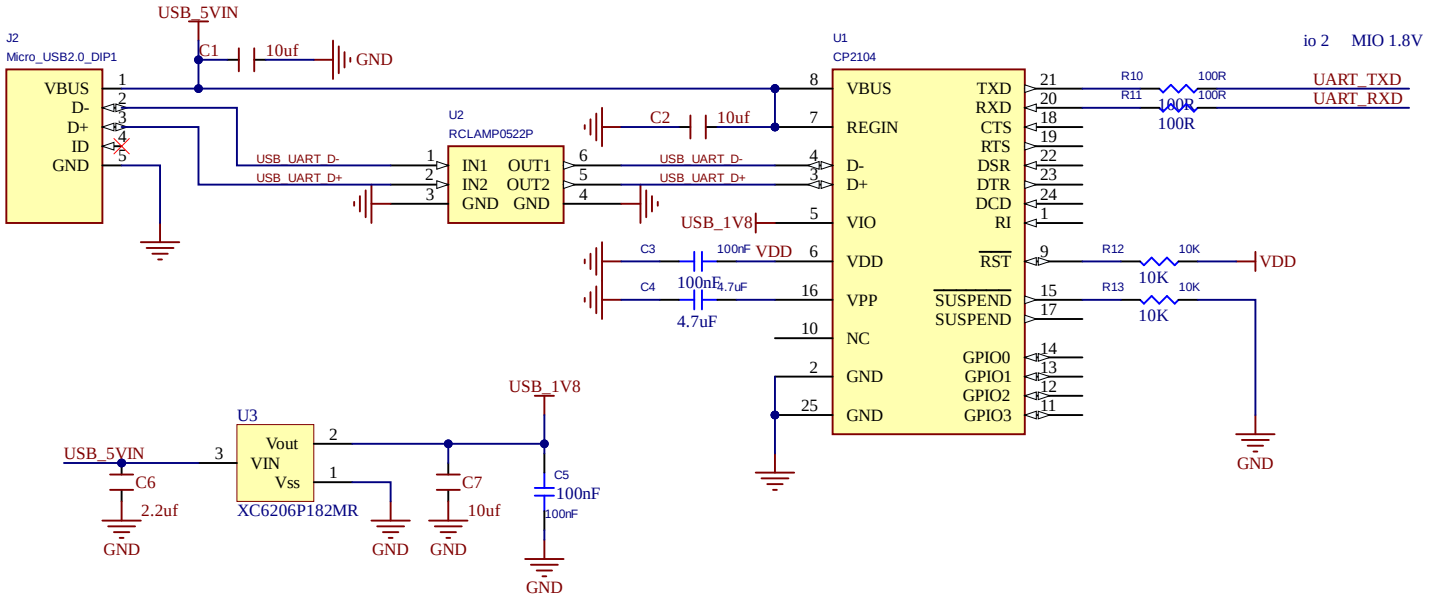

当底板和核心板共享串口芯片

1)、USB_5VIN给核心板串口芯片使用

2)、UART-D-/UART-D+为USB串口芯片USB的差分数据线

当底板单独使用串口芯片(推荐)

1)、UART_RXD/UART_TXD为ZYNQ的串口信号，接到底板的串口芯片

2)、去掉核心板上连接到核心板串口芯片的RX TX电阻，分别为R66,R69

米联客	MSXBO		
TechWeb:	www.uisrc.com		
ProjectName:	MZ7XB_Fun.PrjPCB		
Page Title:	03_UART_232.SchDoc	Rev:	20191012
Date:	2022/6/15 - 18:44:30	Sheet 3 of 16	

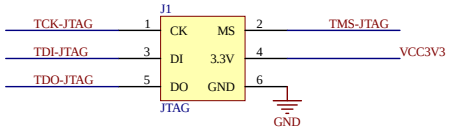

米联客	MSXBO		
TechWeb:	www.uisrc.com		
ProjectName:	MZ7XB_Fun.PrjPCB		
Page Title:	05_USB_JTAG.SchDoc	Rev:	20191012
Date:	2022/6/15 - 18:44:30	Sheet 5 of 16	

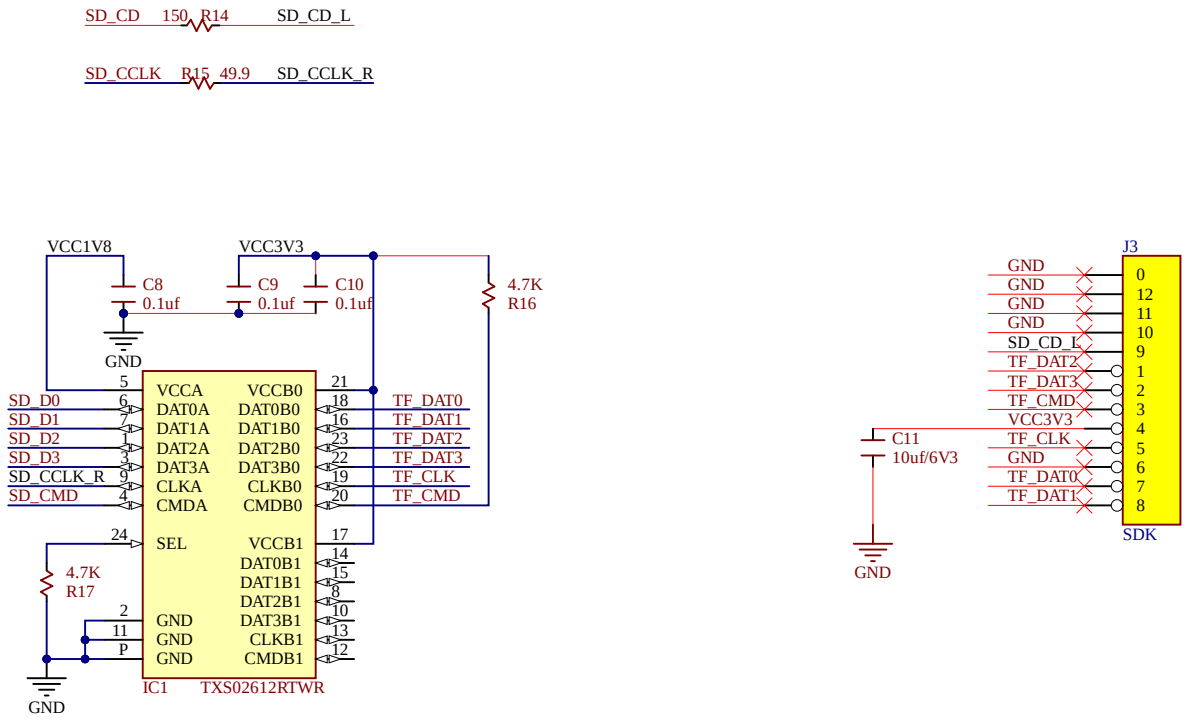

米联客	MSXBO		
TechWeb:	www.uisrc.com		
ProjectName:	MZ7XB_Fun.PrjPCB		
Page Title:	06_TF_CARD.SchDoc	Rev:	20191012
Date:	2022/6/15 - 18:44:30	Sheet 6 of 16	

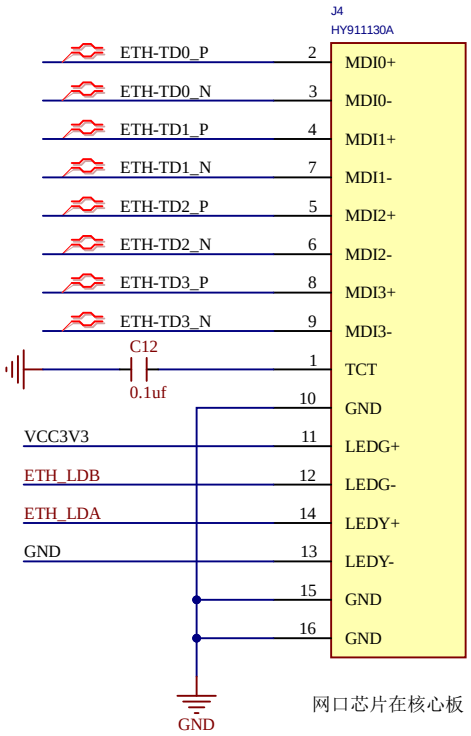

网口芯片在核心板

米联客	MSXBO		
TechWeb:	www.uisrc.com		
ProjectName:	MZ7XB_Fun.PrjPCB		
Page Title:	07_PS_ETH_RJ45.SchDoc	Rev:	20191012
Date:	2022/6/15 - 18:44:30	Sheet 7 of 16	

SDA与LED1共用IO，SCL与LED2共用IO

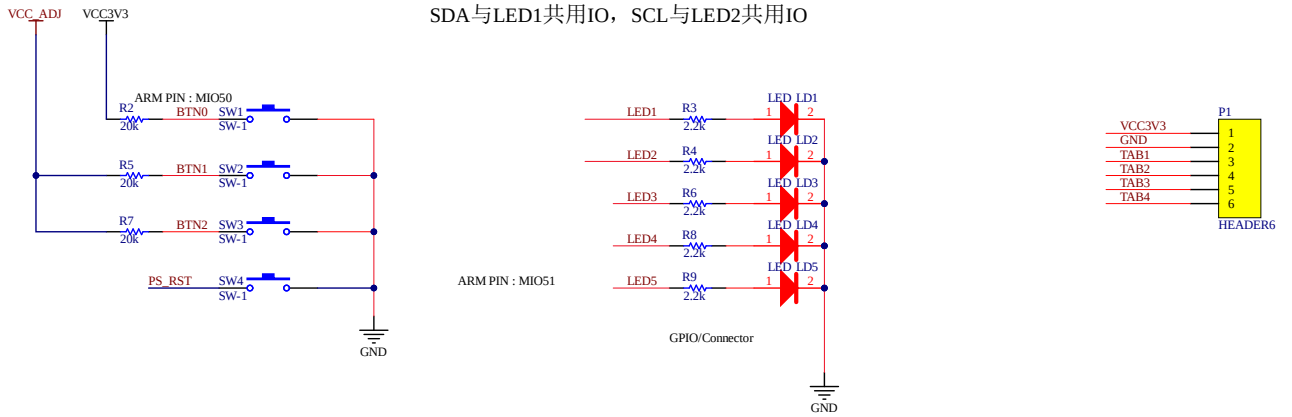

米联客	MSXBO		
TechWeb:	www.uisrc.com		
ProjectName:	MZ7XB_Fun.PrjPCB		
Page Title:	11_BTN_LED_GPIO.SchDoc	Rev:	20191012
Date:	2022/6/15 - 18:44:30	Sheet 11 of 16	

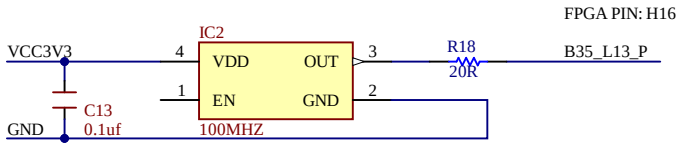

米联客	MSXBO		
TechWeb:	www.uisrc.com		
ProjectName:	MZ7XB_Fun.PrjPCB		
Page Title:	12_PLCLK_100M.SchDoc	Rev:	20191012
Date:	2022/6/15 - 18:44:30	Sheet 12 of 16	

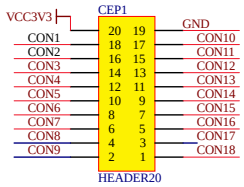
CEP1
VCC3V3
GND
CON1
CON2
CON3
CON4
CON5
CON6
CON7
CON8
CON9
CON10
CON11
CON12
CON13
CON14
CON15
CON16
CON17
CON18
20 19
18 17
16 15
14 13
12 11
10 9
8 7
6 5
4 3
2 1
HEADER20

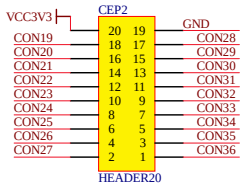
CEP2
VCC3V3
GND
CON19
CON20
CON21
CON22
CON23
CON24
CON25
CON26
CON27
CON28
CON29
CON30
CON31
CON32
CON33
CON34
CON35
CON36
20 19
18 17
16 15
14 13
12 11
10 9
8 7
6 5
4 3
2 1
HEADER20

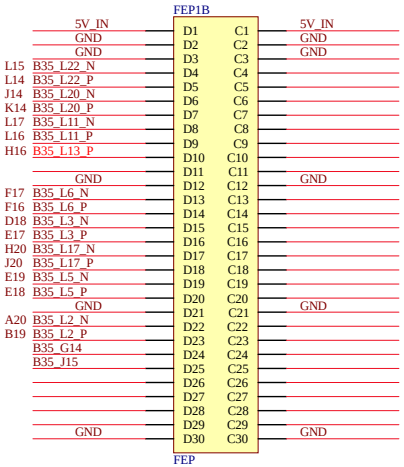

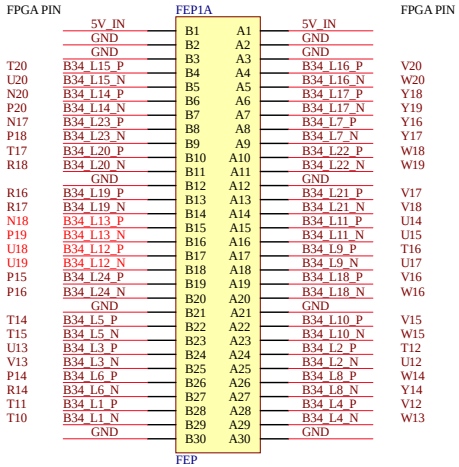

BANK34为ADJ电压BANK 改核心板电阻可以调整电压，默认ADJ=3.3V

差分对命名：比如B34_L1_P,B34_L1_N代表了 BANK34上的L1对差分对

FPGA的PIN号：为字母+数字 比如 W13 就是FPGA的IO 号

米联客	MSXBO		
TechWeb:	www.uisrc.com		
ProjectName:	MZ7XB_Fun.PrjPCB		
Page Title:	14_FEP.SchDoc	Rev:	20191012
Date:	2022/6/15 - 18:44:30	Sheet 14 of 16	

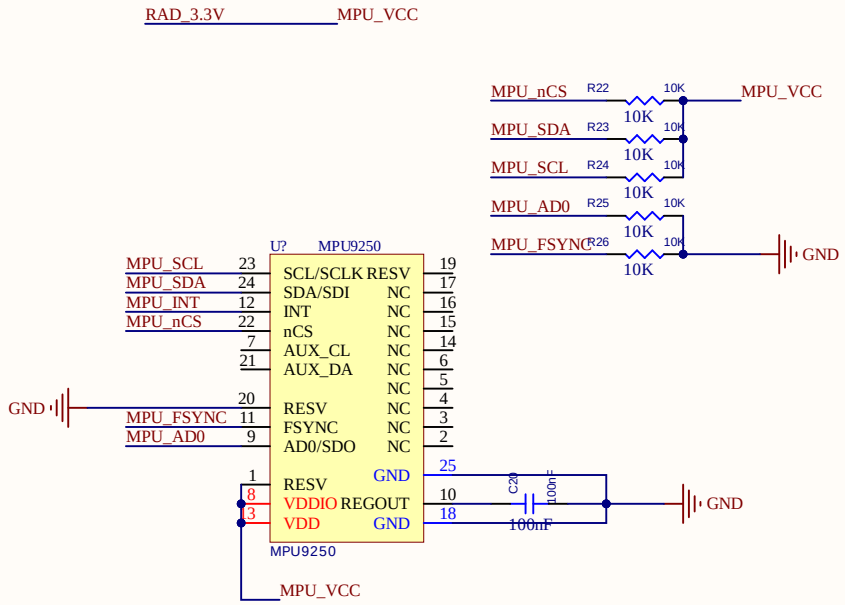

Title		
Size A4	Number	Revision
Date: 6/15/2022	Sheet of	
File: D:\PCB\MZ7XB_Fun20191012\MPU9250.SchDoc	Drawn By:	

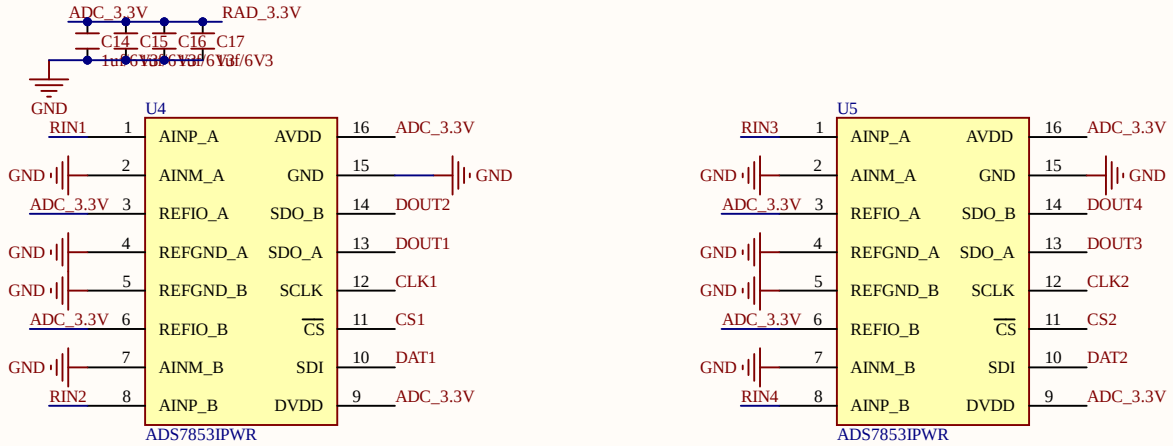

Title			
Size A4	Number		Revision
Date: 6/15/2022		Sheet of	
File: D:\PCB\MZ7XB_Fun20191012\Sheet1.SchDoc		Drawn By:	

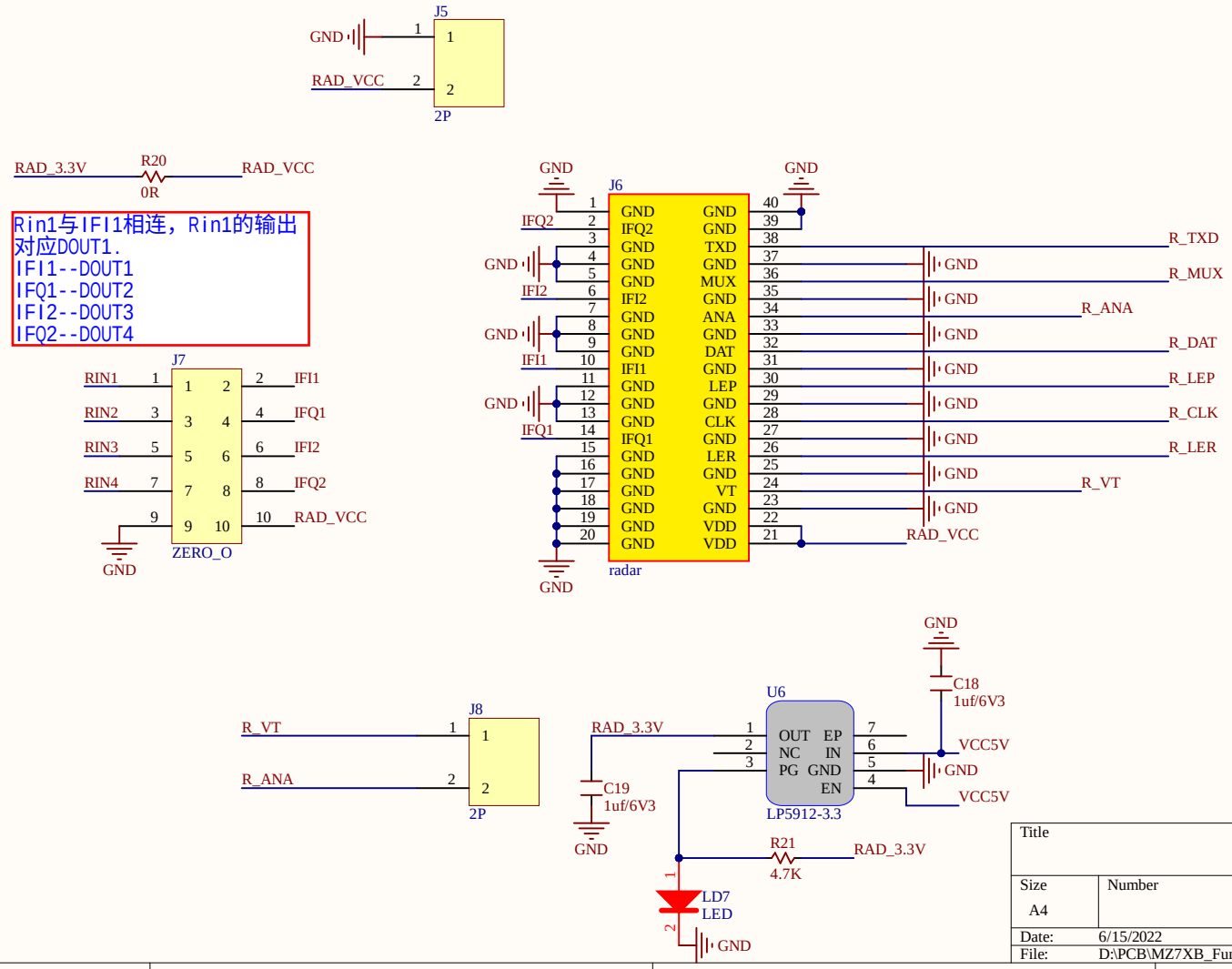
J5
GND
RAD_VCC
2P
RAD_3.3V
R20
0R
RAD_VCC
Rin1与IFI1相连，Rin1的输出对应DOUT1.
IFI1--DOUT1
IFQ1--DOUT2
IFI2--DOUT3
IFQ2--DOUT4
J7
RIN1
RIN2
RIN3
RIN4
IFI1
IFQ1
IFI2
IFQ2
RAD_VCC
ZERO_O
J6
GND
IFQ2
IFI2
IFI1
IFQ1
TXD
MUX
ANA
DAT
LEP
CLK
LER
VT
VDD
R_TXD
R_MUX
R_ANA
R_DAT
R_LEP
R_CLK
R_LER
R_VT
RAD_VCC
radar
J8
R_VT
R_ANA
2P
U6
OUT
NC
PG
EP
IN
GND
EN
LP5912-3.3
C18
1uf/6V3
C19
1uf/6V3
VCC5V
R21
4.7K
LD7
LED
Title
Size
A4
Number
Revision
Date: 6/15/2022
Sheet of
File: D:\PCB\MZ7XB_Fun20191012\Sheet2.SchDoc
Drawn By:

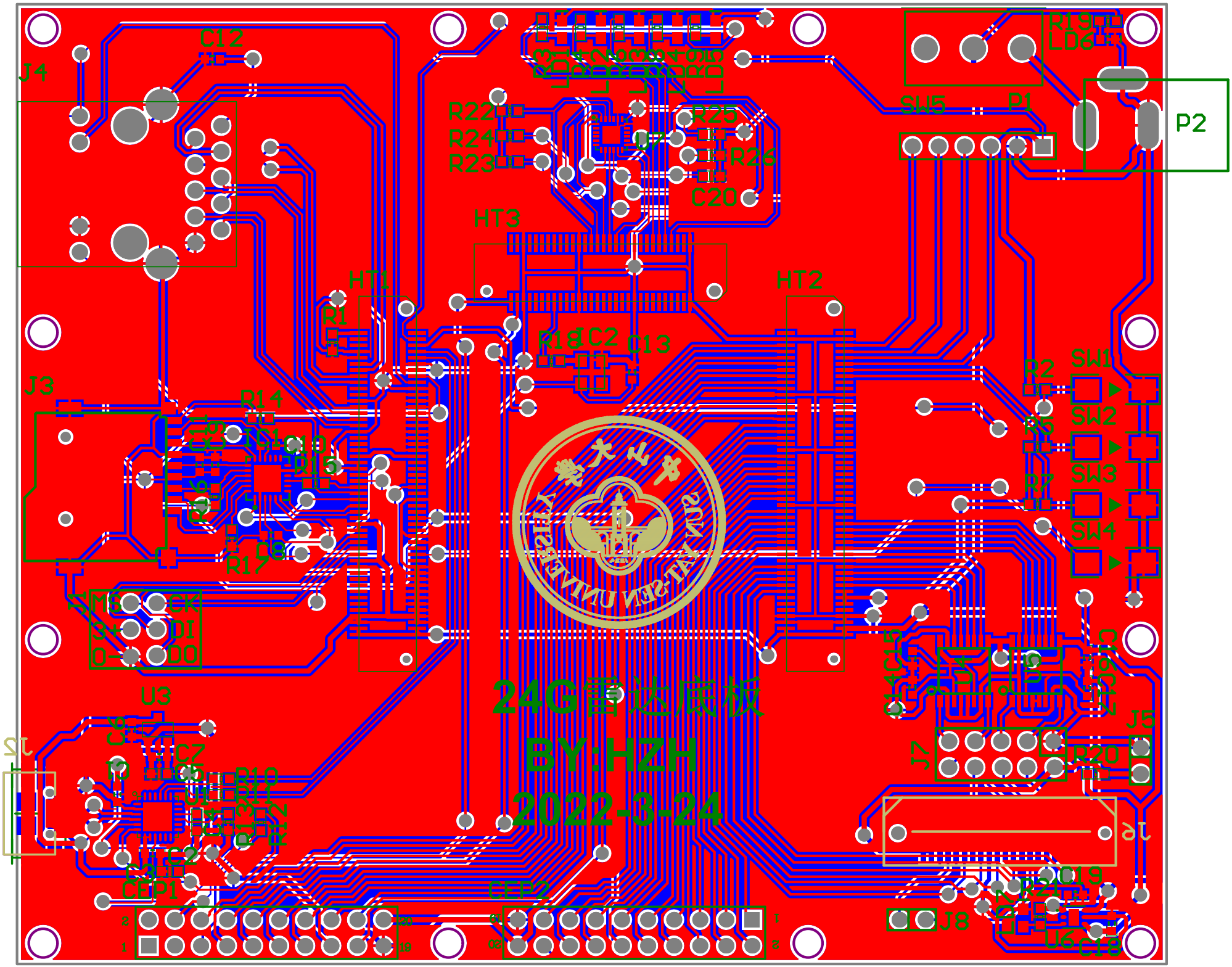
24G雷达底板
BY:HZH
2022-3-24
J4
C12
R22
R24
R23
R25
R26
C20
HT3
HT1
HT2
R1
R18
C2
C13
J3
R14
R17
C8
R19
LD6
SW5
P1
P2
R2
R5
R7
SW1
SW2
SW3
SW4
U3
C7
R10
J5
J7
R20
J9
J8
CEP1
CEP2