SPI FLASH

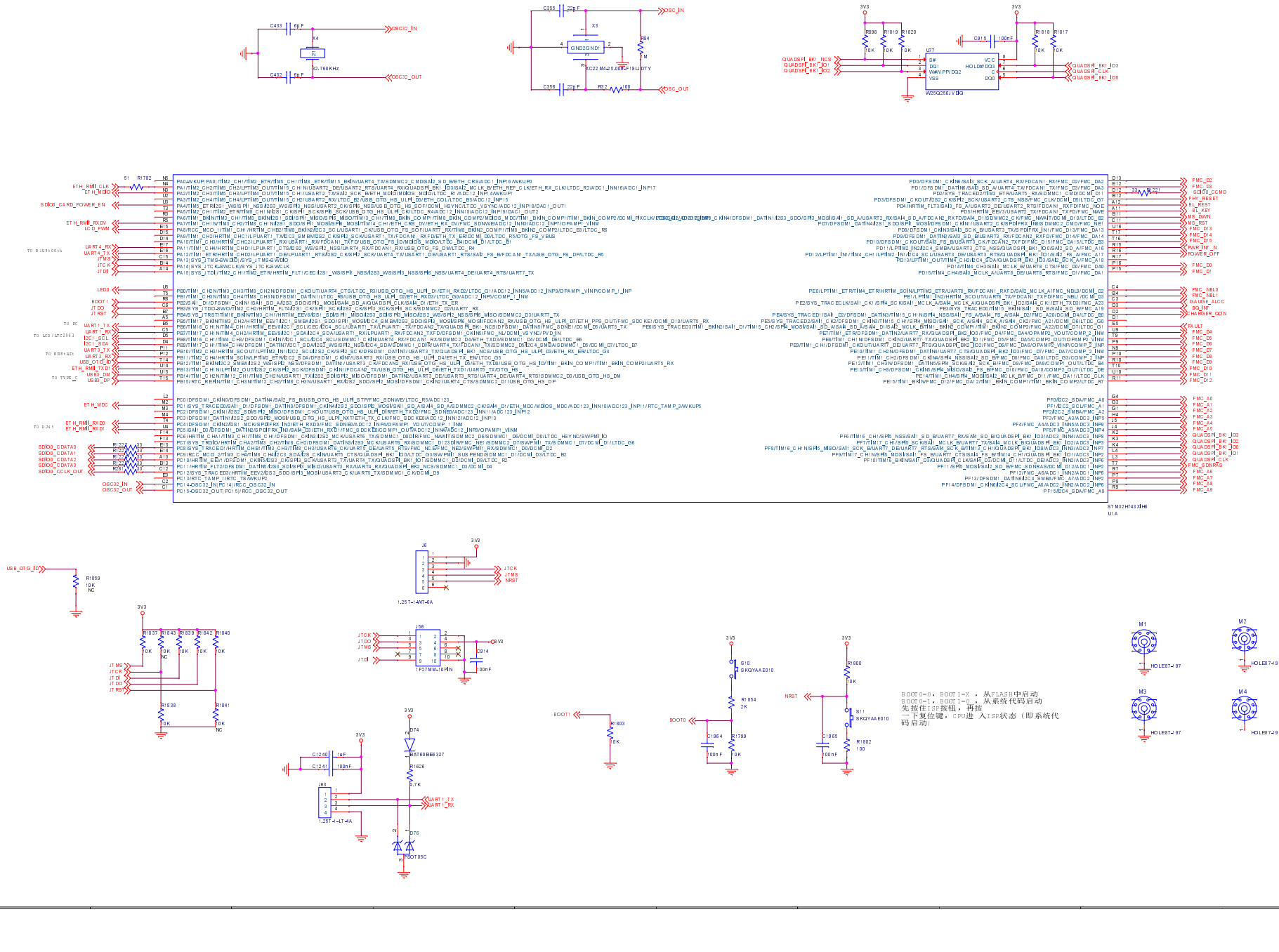

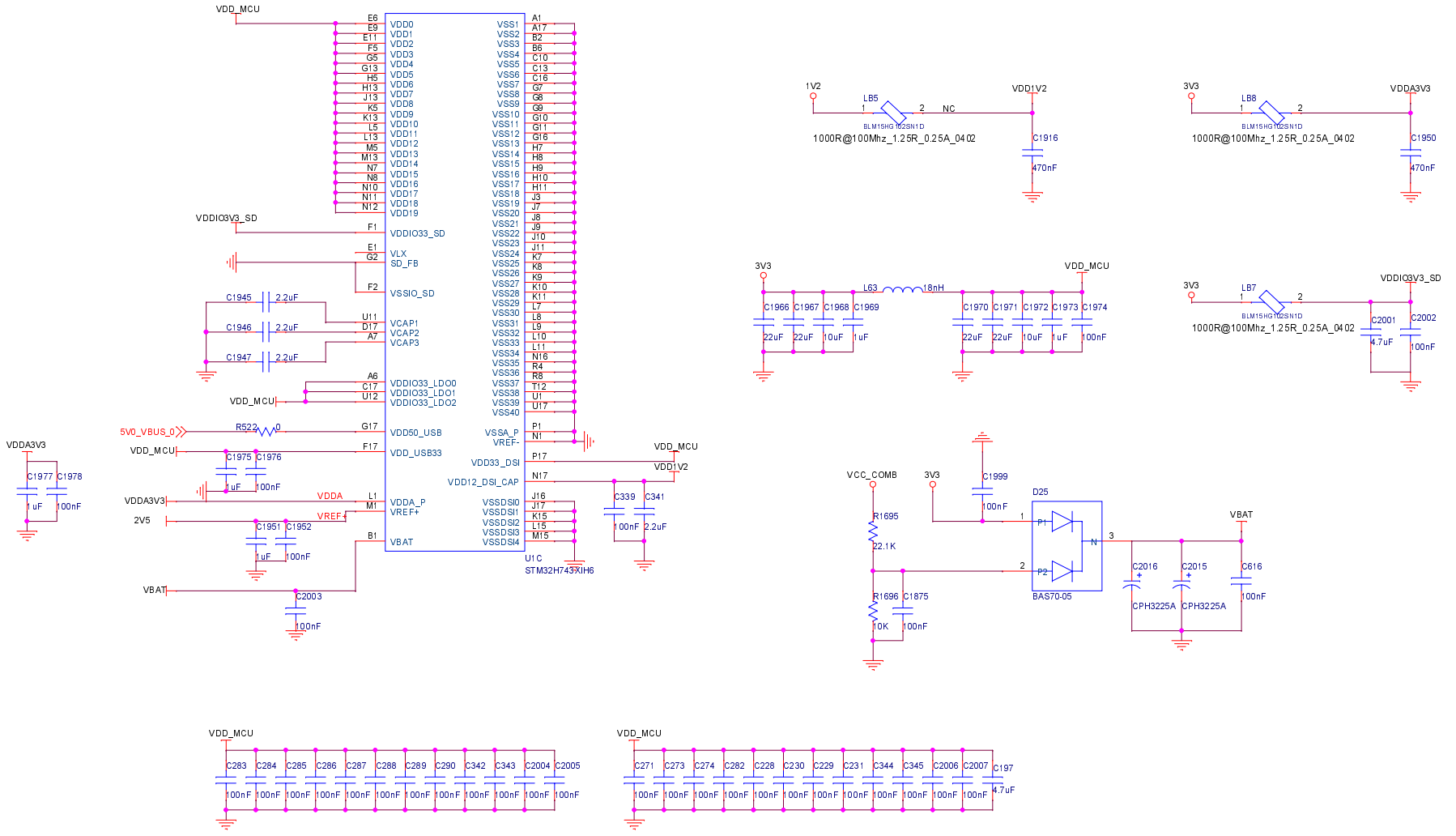

VDD_MCU
VDDIO3V3_SD
VDD0
VDD1
VDD2
VDD3
VDD4
VDD5
VDD6
VDD7
VDD8
VDD9
VDD10
VDD11
VDD12
VDD13
VDD14
VDD15
VDD16
VDD17
VDD18
VDD19
VDDIO33_SD
VLX
SD_FB
VSSIO_SD
VCAP1
VCAP2
VCAP3
VDDIO33_LDO0
VDDIO33_LDO1
VDDIO33_LDO2
VDD50_USB
VDD_USB33
VDDA_P
VREF+
VBAT
VSS1
VSS2
VSS3
VSS4
VSS5
VSS6
VSS7
VSS8
VSS9
VSS10
VSS11
VSS12
VSS13
VSS14
VSS15
VSS16
VSS17
VSS18
VSS19
VSS20
VSS21
VSS22
VSS23
VSS24
VSS25
VSS26
VSS27
VSS28
VSS29
VSS30
VSS31
VSS32
VSS33
VSS34
VSS35
VSS36
VSS37
VSS38
VSS39
VSS40
VSSA_P
VREF-
VDD33_DSI
VDD12_DSI_CAP
VSSDSI0
VSSDSI1
VSSDSI2
VSSDSI3
VSSDSI4
U1C
STM32H743XIH6
C1945 2.2uF
C1946 2.2uF
C1947 2.2uF
5V0_VBUS_0
R522 0
C1975 C1976
1uF 100nF
VDDA3V3
VDDA
VREF+
2V5
C1951 C1952
1uF 100nF
C2003
100nF
VDD1V2
C339 C341
100nF 2.2uF
C1977 C1978
1uF 100nF
1V2
LB5
BLM15HG102SN1D
NC
1000R@100Mhz_1.25R_0.25A_0402
C1916
470nF
3V3
LB8
1000R@100Mhz_1.25R_0.25A_0402
C1950
470nF
L63 18nH
C1966 C1967 C1968 C1969
22uF 22uF 10uF 1uF
C1970 C1971 C1972 C1973 C1974
22uF 22uF 10uF 1uF 100nF
LB7
1000R@100Mhz_1.25R_0.25A_0402
C2001 C2002
4.7uF 100nF
VCC_COMB
R1695
22.1K
R1696 C1875
10K 100nF
C1999
100nF
D25
BAS70-05
C2016 C2015 C616
CPH3225A CPH3225A
100nF
C283 C284 C285 C286 C287 C288 C289 C290 C342 C343 C2004 C2005
100nF 100nF 100nF 100nF 100nF 100nF 100nF 100nF 100nF 100nF 100nF 100nF
C271 C273 C274 C282 C228 C230 C229 C231 C344 C345 C2006 C2007 C197
100nF 100nF 100nF 100nF 100nF 100nF 100nF 100nF 100nF 100nF 100nF 100nF 4.7uF

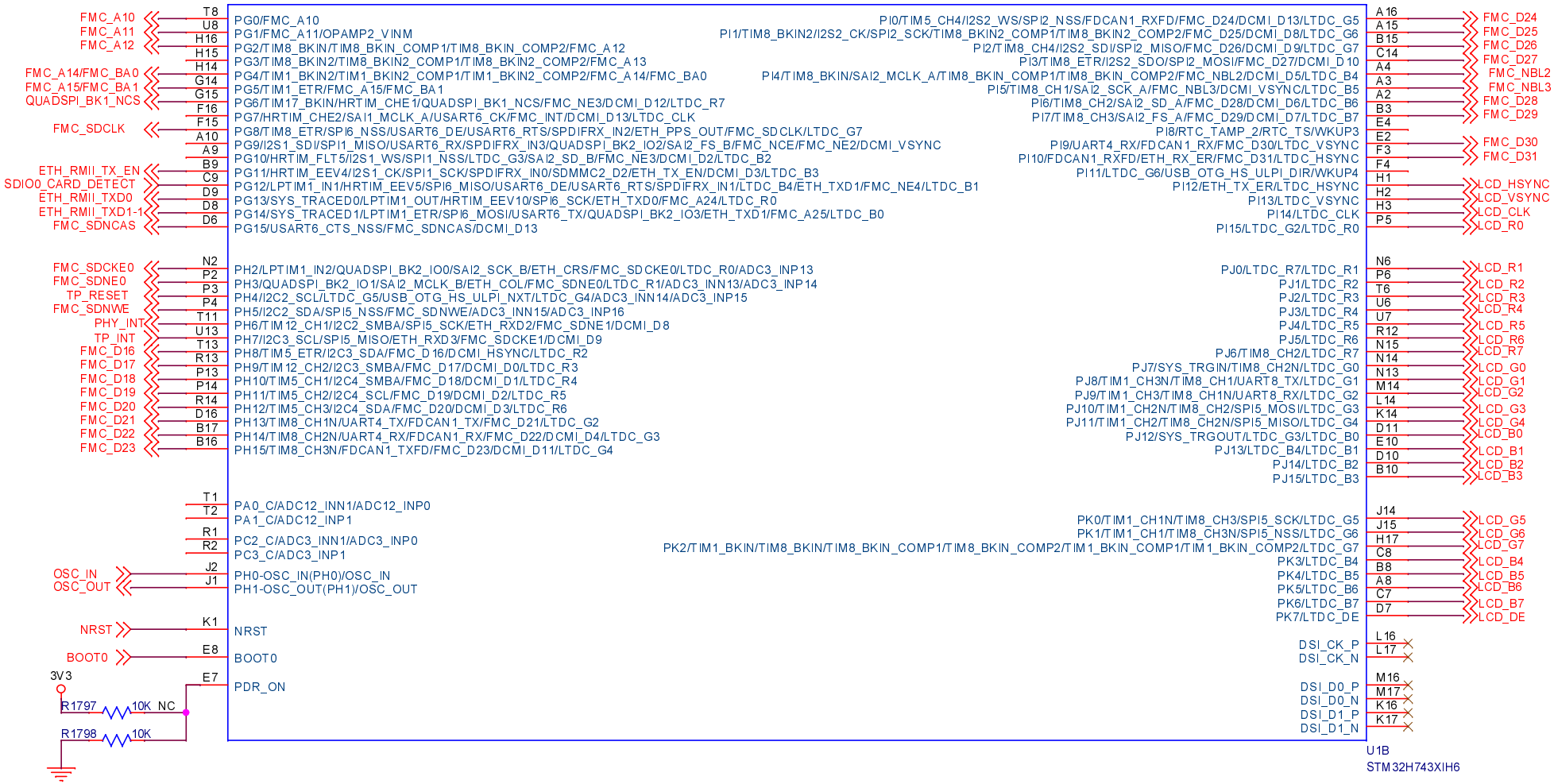
FMC_A10
FMC_A11
FMC_A12
FMC_A14/FMC_BA0
FMC_A15/FMC_BA1
QUADSPI_BK1_NCS
FMC_SDCLK
ETH_RMII_TX_EN
SDIO0_CARD_DETECT
ETH_RMII_TXD0
ETH_RMII_TXD1-1
FMC_SDNCAS
FMC_SDCKE0
FMC_SDNE0
TP_RESET
FMC_SDNWE
PHY_INT
TP_INT
FMC_D16
FMC_D17
FMC_D18
FMC_D19
FMC_D20
FMC_D21
FMC_D22
FMC_D23
OSC_IN
OSC_OUT
NRST
BOOT0
3V3
R1797
10K
NC
R1798
10K
T8 PG0/FMC_A10
U8 PG1/FMC_A11/OPAMP2_VINM
H16 PG2/TIM8_BKIN/TIM8_BKIN_COMP1/TIM8_BKIN_COMP2/FMC_A12
H15 PG3/TIM8_BKIN2/TIM8_BKIN2_COMP1/TIM8_BKIN2_COMP2/FMC_A13
H14 PG4/TIM1_BKIN2/TIM1_BKIN2_COMP1/TIM1_BKIN2_COMP2/FMC_A14/FMC_BA0
G14 PG5/TIM1_ETR/FMC_A15/FMC_BA1
G15 PG6/TIM17_BKIN/HRTIM_CHE1/QUADSPI_BK1_NCS/FMC_NE3/DCMI_D12/LTDC_R7
F16 PG7/HRTIM_CHE2/SAI1_MCLK_A/USART6_CK/FMC_INT/DCMI_D13/LTDC_CLK
F15 PG8/TIM8_ETR/SPI6_NSS/USART6_DE/USART6_RTS/SPDIFRX_IN2/ETH_PPS_OUT/FMC_SDCLK/LTDC_G7
A10 PG9/I2S1_SDI/SPI1_MISO/USART6_RX/SPDIFRX_IN3/QUADSPI_BK2_IO2/SAI2_FS_B/FMC_NCE/FMC_NE2/DCMI_VSYNC
A9 PG10/HRTIM_FLT5/I2S1_WS/SPI1_NSS/LTDC_G3/SAI2_SD_B/FMC_NE3/DCMI_D2/LTDC_B2
B9 PG11/HRTIM_EEV4/I2S1_CK/SPI1_SCK/SPDIFRX_IN0/SDMMC2_D2/ETH_TX_EN/DCMI_D3/LTDC_B3
C9 PG12/LPTIM1_IN1/HRTIM_EEV5/SPI6_MISO/USART6_DE/USART6_RTS/SPDIFRX_IN1/LTDC_B4/ETH_TXD1/FMC_NE4/LTDC_B1
D9 PG13/SYS_TRACED0/LPTIM1_OUT/HRTIM_EEV10/SPI6_SCK/ETH_TXD0/FMC_A24/LTDC_R0
D8 PG14/SYS_TRACED1/LPTIM1_ETR/SPI6_MOSI/USART6_TX/QUADSPI_BK2_IO3/ETH_TXD1/FMC_A25/LTDC_B0
D6 PG15/USART6_CTS_NSS/FMC_SDNCAS/DCMI_D13
N2 PH2/LPTIM1_IN2/QUADSPI_BK2_IO0/SAI2_SCK_B/ETH_CRS/FMC_SDCKE0/LTDC_R0/ADC3_INP13
P2 PH3/QUADSPI_BK2_IO1/SAI2_MCLK_B/ETH_COL/FMC_SDNE0/LTDC_R1/ADC3_INN13/ADC3_INP14
P3 PH4/I2C2_SCL/LTDC_G5/USB_OTG_HS_ULPI_NXT/LTDC_G4/ADC3_INN14/ADC3_INP15
P4 PH5/I2C2_SDA/SPI5_NSS/FMC_SDNWE/ADC3_INN15/ADC3_INP16
T11 PH6/TIM12_CH1/I2C2_SMBA/SPI5_SCK/ETH_RXD2/FMC_SDNE1/DCMI_D8
U13 PH7/I2C3_SCL/SPI5_MISO/ETH_RXD3/FMC_SDCKE1/DCMI_D9
T13 PH8/TIM5_ETR/I2C3_SDA/FMC_D16/DCMI_HSYNC/LTDC_R2
R13 PH9/TIM12_CH2/I2C3_SMBA/FMC_D17/DCMI_D0/LTDC_R3
P13 PH10/TIM5_CH1/I2C4_SMBA/FMC_D18/DCMI_D1/LTDC_R4
P14 PH11/TIM5_CH2/I2C4_SCL/FMC_D19/DCMI_D2/LTDC_R5
R14 PH12/TIM5_CH3/I2C4_SDA/FMC_D20/DCMI_D3/LTDC_R6
D16 PH13/TIM8_CH1N/UART4_TX/FDCAN1_TX/FMC_D21/LTDC_G2
B17 PH14/TIM8_CH2N/UART4_RX/FDCAN1_RX/FMC_D22/DCMI_D4/LTDC_G3
B16 PH15/TIM8_CH3N/FDCAN1_TXFD/FMC_D23/DCMI_D11/LTDC_G4
T1 PA0_C/ADC12_INN1/ADC12_INP0
T2 PA1_C/ADC12_INP1
R1 PC2_C/ADC3_INN1/ADC3_INP0
R2 PC3_C/ADC3_INP1
J2 PH0-OSC_IN(PH0)/OSC_IN
J1 PH1-OSC_OUT(PH1)/OSC_OUT
K1 NRST
E8 BOOT0
E7 PDR_ON
PI0/TIM5_CH4/I2S2_WS/SPI2_NSS/FDCAN1_RXFD/FMC_D24/DCMI_D13/LTDC_G5
PI1/TIM8_BKIN2/I2S2_CK/SPI2_SCK/TIM8_BKIN2_COMP1/TIM8_BKIN2_COMP2/FMC_D25/DCMI_D8/LTDC_G6
PI2/TIM8_CH4/I2S2_SDI/SPI2_MISO/FMC_D26/DCMI_D9/LTDC_G7
PI3/TIM8_ETR/I2S2_SDO/SPI2_MOSI/FMC_D27/DCMI_D10
PI4/TIM8_BKIN/SAI2_MCLK_A/TIM8_BKIN_COMP1/TIM8_BKIN_COMP2/FMC_NBL2/DCMI_D5/LTDC_B4
PI5/TIM8_CH1/SAI2_SCK_A/FMC_NBL3/DCMI_VSYNC/LTDC_B5
PI6/TIM8_CH2/SAI2_SD_A/FMC_D28/DCMI_D6/LTDC_B6
PI7/TIM8_CH3/SAI2_FS_A/FMC_D29/DCMI_D7/LTDC_B7
PI8/RTC_TAMP_2/RTC_TS/WKUP3
PI9/UART4_RX/FDCAN1_RX/FMC_D30/LTDC_VSYNC
PI10/FDCAN1_RXFD/ETH_RX_ER/FMC_D31/LTDC_HSYNC
PI11/LTDC_G6/USB_OTG_HS_ULPI_DIR/WKUP4
PI12/ETH_TX_ER/LTDC_HSYNC
PI13/LTDC_VSYNC
PI14/LTDC_CLK
PI15/LTDC_G2/LTDC_R0
PJ0/LTDC_R7/LTDC_R1
PJ1/LTDC_R2
PJ2/LTDC_R3
PJ3/LTDC_R4
PJ4/LTDC_R5
PJ5/LTDC_R6
PJ6/TIM8_CH2/LTDC_R7
PJ7/SYS_TRGIN/TIM8_CH2N/LTDC_G0
PJ8/TIM1_CH3N/TIM8_CH1/UART8_TX/LTDC_G1
PJ9/TIM1_CH3/TIM8_CH1N/UART8_RX/LTDC_G2
PJ10/TIM1_CH2N/TIM8_CH2/SPI5_MOSI/LTDC_G3
PJ11/TIM1_CH2/TIM8_CH2N/SPI5_MISO/LTDC_G4
PJ12/SYS_TRGOUT/LTDC_G3/LTDC_B0
PJ13/LTDC_B4/LTDC_B1
PJ14/LTDC_B2
PJ15/LTDC_B3
PK0/TIM1_CH1N/TIM8_CH3/SPI5_SCK/LTDC_G5
PK1/TIM1_CH1/TIM8_CH3N/SPI5_NSS/LTDC_G6
PK2/TIM1_BKIN/TIM8_BKIN/TIM8_BKIN_COMP1/TIM8_BKIN_COMP2/TIM1_BKIN_COMP1/TIM1_BKIN_COMP2/LTDC_G7
PK3/LTDC_B4
PK4/LTDC_B5
PK5/LTDC_B6
PK6/LTDC_B7
PK7/LTDC_DE
DSI_CK_P
DSI_CK_N
DSI_D0_P
DSI_D0_N
DSI_D1_P
DSI_D1_N
A16 FMC_D24
A15 FMC_D25
B15 FMC_D26
C14 FMC_D27
A4 FMC_NBL2
A3 FMC_NBL3
A2 FMC_D28
B3 FMC_D29
E4
E2
F3 FMC_D30
F4 FMC_D31
H1
H2 LCD_HSYNC
H3 LCD_VSYNC
P5 LCD_CLK
LCD_R0
N6 LCD_R1
P6 LCD_R2
T6 LCD_R3
U6 LCD_R4
U7 LCD_R5
R12 LCD_R6
N15 LCD_R7
N14 LCD_G0
N13 LCD_G1
M14 LCD_G2
L14 LCD_G3
K14 LCD_G4
D11 LCD_B0
E10 LCD_B1
D10 LCD_B2
B10 LCD_B3
J14 LCD_G5
J15 LCD_G6
H17 LCD_G7
C8 LCD_B4
B8 LCD_B5
A8 LCD_B6
C7 LCD_B7
D7 LCD_DE
L16
L17
M16
M17
K16
K17
U1B
STM32H743XIH6

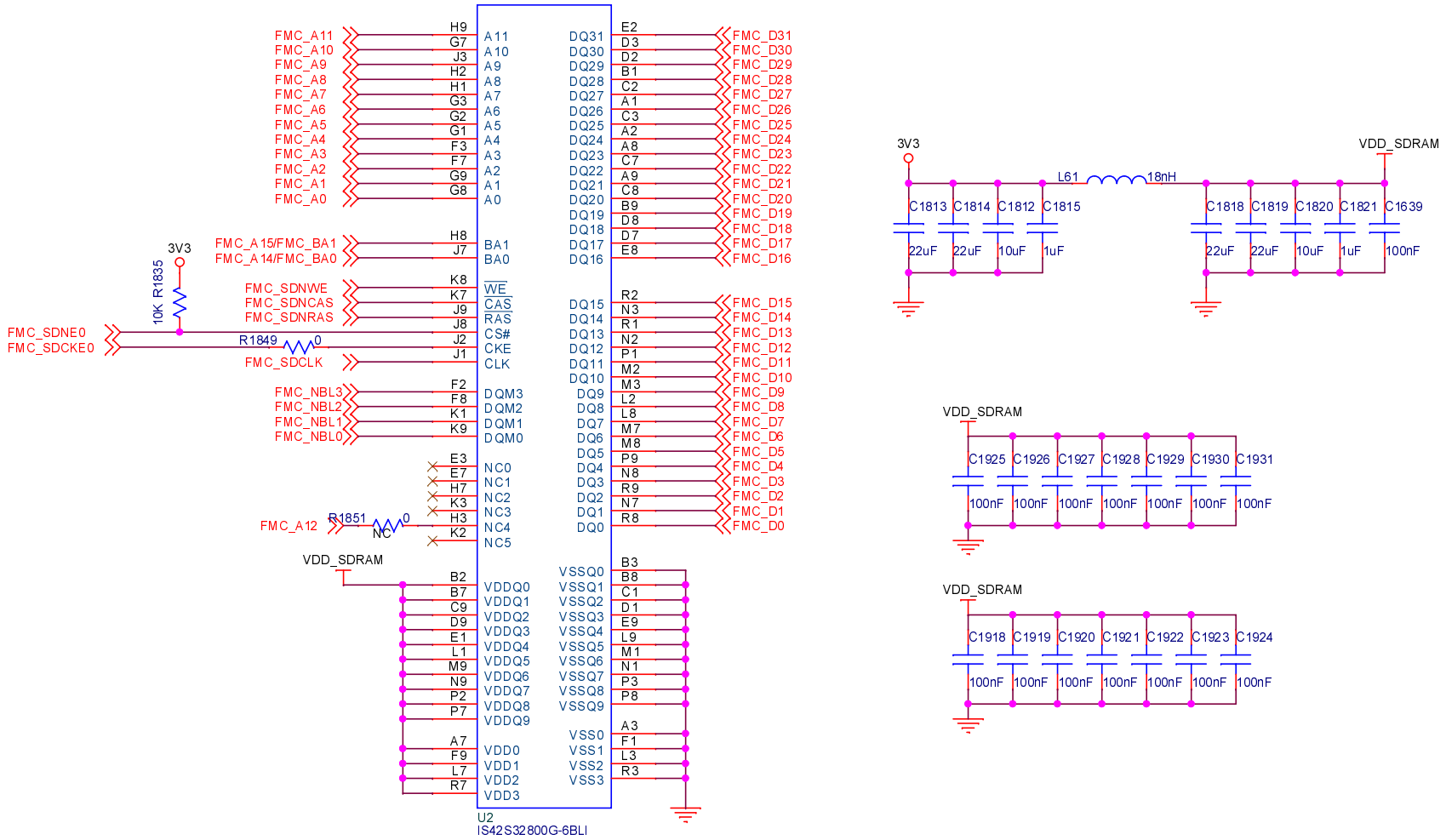
FMC_A11
FMC_A10
FMC_A9
FMC_A8
FMC_A7
FMC_A6
FMC_A5
FMC_A4
FMC_A3
FMC_A2
FMC_A1
FMC_A0
H9
G7
J3
H2
H1
G3
G2
G1
F3
F7
G9
G8
A11
A10
A9
A8
A7
A6
A5
A4
A3
A2
A1
A0
3V3
10K R1835
FMC_A15/FMC_BA1
FMC_A14/FMC_BA0
H8
J7
BA1
BA0
FMC_SDNWE
FMC_SDNCAS
FMC_SDNRAS
K8
K7
J9
J8
WE
CAS
RAS
FMC_SDNE0
FMC_SDCKE0
R1849
0
J2
J1
CS#
CKE
FMC_SDCLK
CLK
FMC_NBL3
FMC_NBL2
FMC_NBL1
FMC_NBL0
F2
F8
K1
K9
DQM3
DQM2
DQM1
DQM0
E3
E7
H7
K3
H3
K2
NC0
NC1
NC2
NC3
NC4
NC5
FMC_A12
R1851
0
NC
VDD_SDRAM
B2
B7
C9
D9
E1
L1
M9
N9
P2
P7
A7
F9
L7
R7
VDDQ0
VDDQ1
VDDQ2
VDDQ3
VDDQ4
VDDQ5
VDDQ6
VDDQ7
VDDQ8
VDDQ9
VDD0
VDD1
VDD2
VDD3
DQ31
DQ30
DQ29
DQ28
DQ27
DQ26
DQ25
DQ24
DQ23
DQ22
DQ21
DQ20
DQ19
DQ18
DQ17
DQ16
DQ15
DQ14
DQ13
DQ12
DQ11
DQ10
DQ9
DQ8
DQ7
DQ6
DQ5
DQ4
DQ3
DQ2
DQ1
DQ0
E2
D3
D2
B1
C2
A1
C3
A2
A8
C7
A9
C8
B9
D8
D7
E8
R2
N3
R1
N2
P1
M2
M3
L2
L8
M7
M8
P9
N8
R9
N7
R8
VSSQ0
VSSQ1
VSSQ2
VSSQ3
VSSQ4
VSSQ5
VSSQ6
VSSQ7
VSSQ8
VSSQ9
VSS0
VSS1
VSS2
VSS3
B3
B8
C1
D1
E9
L9
M1
N1
P3
P8
A3
F1
L3
R3
FMC_D31
FMC_D30
FMC_D29
FMC_D28
FMC_D27
FMC_D26
FMC_D25
FMC_D24
FMC_D23
FMC_D22
FMC_D21
FMC_D20
FMC_D19
FMC_D18
FMC_D17
FMC_D16
FMC_D15
FMC_D14
FMC_D13
FMC_D12
FMC_D11
FMC_D10
FMC_D9
FMC_D8
FMC_D7
FMC_D6
FMC_D5
FMC_D4
FMC_D3
FMC_D2
FMC_D1
FMC_D0
U2
IS42S32800G-6BLI
3V3
L61
18nH
VDD_SDRAM
C1813
C1814
C1812
C1815
C1818
C1819
C1820
C1821
C1639
22uF
22uF
10uF
1uF
22uF
22uF
10uF
1uF
100nF
VDD_SDRAM
C1925
C1926
C1927
C1928
C1929
C1930
C1931
100nF
100nF
100nF
100nF
100nF
100nF
100nF
VDD_SDRAM
C1918
C1919
C1920
C1921
C1922
C1923
C1924
100nF
100nF
100nF
100nF
100nF
100nF
100nF

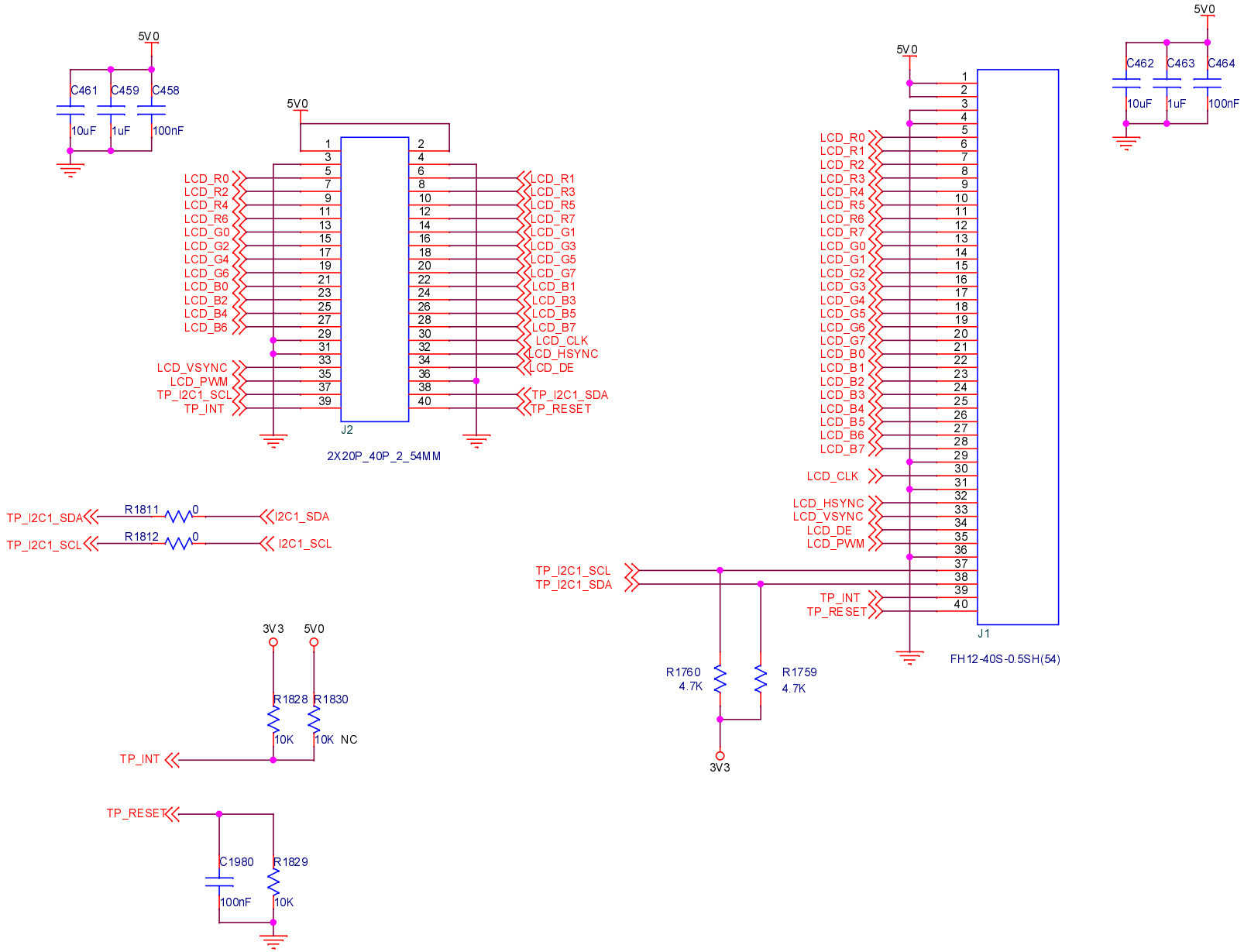
5V0
C461
C459
C458
10uF
1uF
100nF
5V0
J2
2X20P_40P_2_54MM
LCD_R0
LCD_R1
LCD_R2
LCD_R3
LCD_R4
LCD_R5
LCD_R6
LCD_R7
LCD_G0
LCD_G1
LCD_G2
LCD_G3
LCD_G4
LCD_G5
LCD_G6
LCD_G7
LCD_B0
LCD_B1
LCD_B2
LCD_B3
LCD_B4
LCD_B5
LCD_B6
LCD_B7
LCD_CLK
LCD_HSYNC
LCD_DE
LCD_VSYNC
LCD_PWM
TP_I2C1_SCL
TP_I2C1_SDA
TP_INT
TP_RESET
TP_I2C1_SDA
R1811
0
I2C1_SDA
TP_I2C1_SCL
R1812
0
I2C1_SCL
3V3
5V0
R1828
R1830
10K
10K NC
TP_INT
TP_RESET
C1980
R1829
100nF
10K
5V0
C462
C463
C464
10uF
1uF
100nF
5V0
J1
FH12-40S-0.5SH(54)
LCD_R0
LCD_R1
LCD_R2
LCD_R3
LCD_R4
LCD_R5
LCD_R6
LCD_R7
LCD_G0
LCD_G1
LCD_G2
LCD_G3
LCD_G4
LCD_G5
LCD_G6
LCD_G7
LCD_B0
LCD_B1
LCD_B2
LCD_B3
LCD_B4
LCD_B5
LCD_B6
LCD_B7
LCD_CLK
LCD_HSYNC
LCD_VSYNC
LCD_DE
LCD_PWM
TP_I2C1_SCL
TP_I2C1_SDA
TP_INT
TP_RESET
R1760
4.7K
R1759
4.7K
3V3

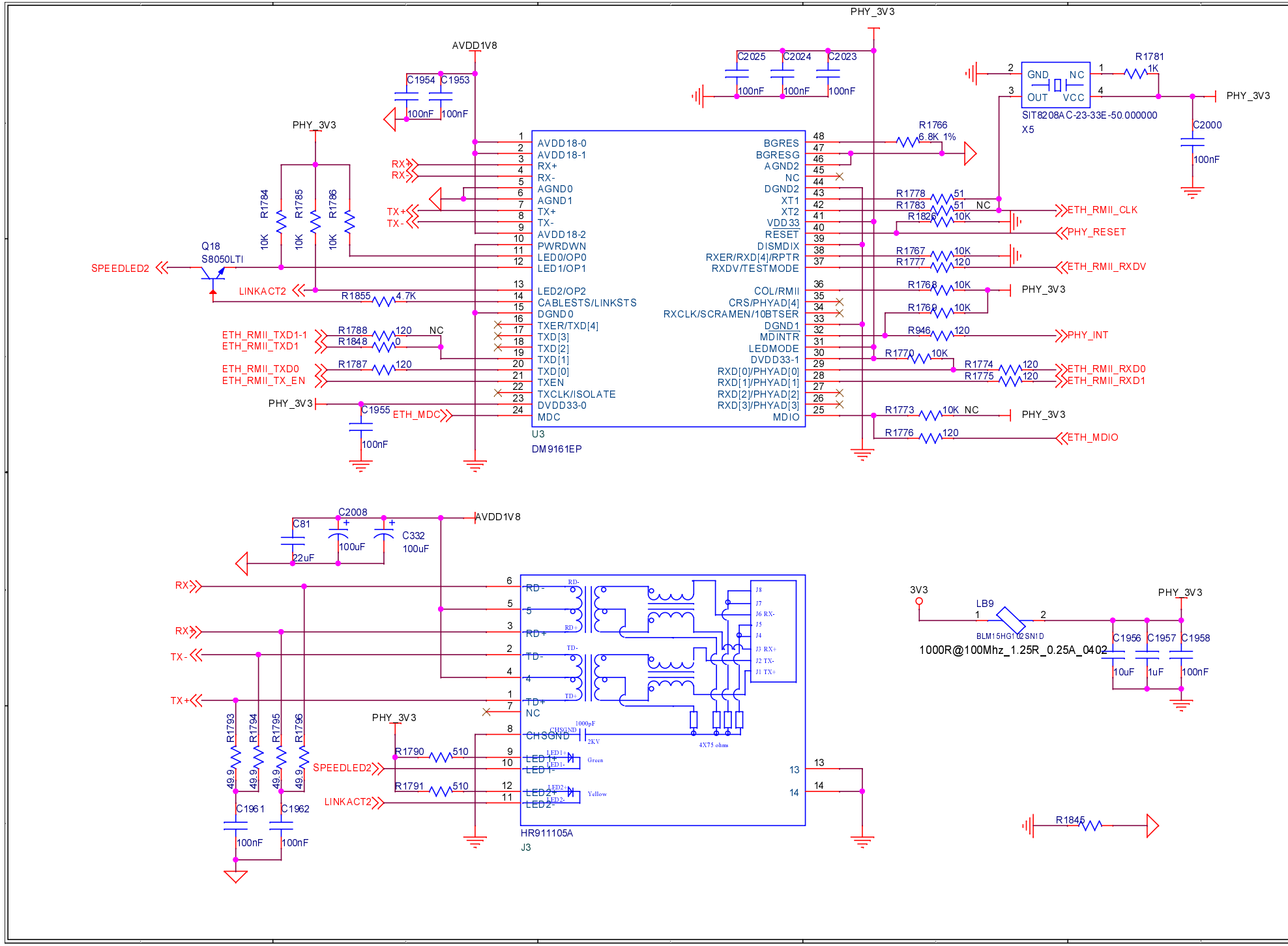
PHY_3V3
AVDD1V8
C2025 C2024 C2023
100nF 100nF 100nF
C1954 C1953
100nF 100nF
R1781
1K
GND NC
OUT VCC
SIT8208AC-23-33E-50.000000
X5
C2000
100nF
R1766
6.8K 1%
R1784 R1785 R1786
10K 10K 10K
Q18
S8050LTI
SPEEDLED2
LINKACT2
R1855 4.7K
AVDD18-0
AVDD18-1
RX+
RX-
AGND0
AGND1
TX+
TX-
AVDD18-2
PWRDWN
LED0/OP0
LED1/OP1
LED2/OP2
CABLESTS/LINKSTS
DGND0
TXER/TXD[4]
TXD[3]
TXD[2]
TXD[1]
TXD[0]
TXEN
TXCLK/ISOLATE
DVDD33-0
MDC
BGRES
BGRESG
AGND2
NC
DGND2
XT1
XT2
VDD33
RESET
DISMDIX
RXER/RXD[4]/RPTR
RXDV/TESTMODE
COL/RMII
CRS/PHYAD[4]
RXCLK/SCRAMEN/10BTSER
DGND1
MDINTR
LEDMODE
DVDD33-1
RXD[0]/PHYAD[0]
RXD[1]/PHYAD[1]
RXD[2]/PHYAD[2]
RXD[3]/PHYAD[3]
MDIO
U3
DM9161EP
R1778 51
R1783 51 NC
R1826 10K
R1767 10K
R1777 120
R1768 10K
R1769 10K
R946 120
R1770 10K
R1774 120
R1775 120
R1773 10K NC
R1776 120
ETH_RMII_CLK
PHY_RESET
ETH_RMII_RXDV
PHY_INT
ETH_RMII_RXD0
ETH_RMII_RXD1
ETH_MDIO
ETH_RMII_TXD1-1
ETH_RMII_TXD1
ETH_RMII_TXD0
ETH_RMII_TX_EN
R1788 120 NC
R1848 0
R1787 120
C1955
100nF
ETH_MDC
C2008
C81
22uF
100uF
C332
100uF
AVDD1V8
RX+
RX-
TX-
TX+
RD-
RD+
TD-
TD+
NC
CHSGND
1000pF
2KV
4X75 ohms
LED1+
LED1-
Green
LED2+
LED2-
Yellow
J8
J7
J6 RX-
J5
J4
J3 RX+
J2 TX-
J1 TX+
HR911105A
J3
R1790 510
R1791 510
SPEEDLED2
LINKACT2
R1793 R1794 R1795 R1796
49.9 49.9 49.9 49.9
C1961 C1962
100nF 100nF
3V3
LB9
BLM15HG102SN1D
1000R@100Mhz_1.25R_0.25A_0402
C1956 C1957 C1958
10uF 1uF 100nF
R1845

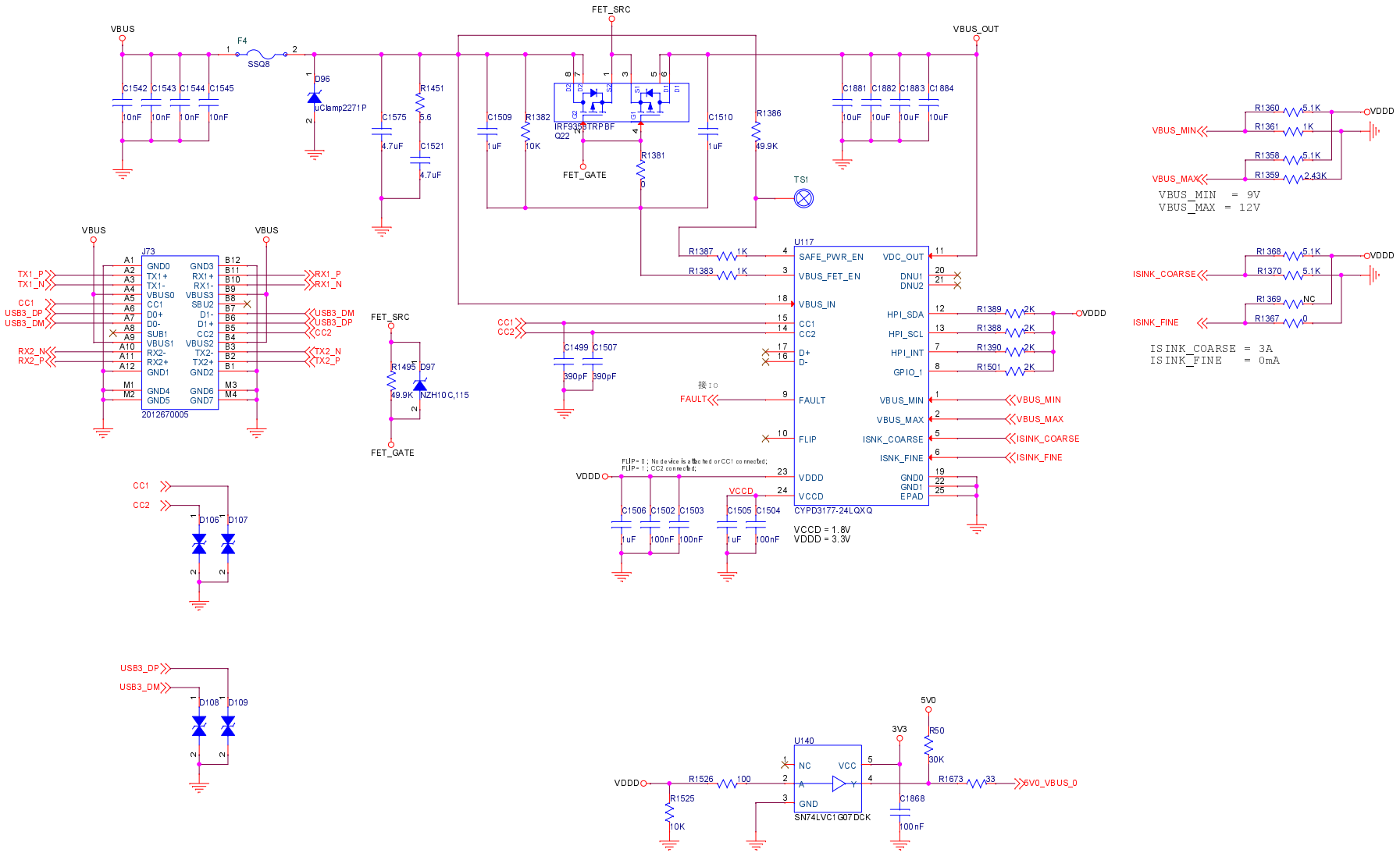

Title	<Title>	
Size A3	Document Number <Doc>	Rev <RevCode>
Date: Thursday, December 29, 2022	Sheet 1 of 1	

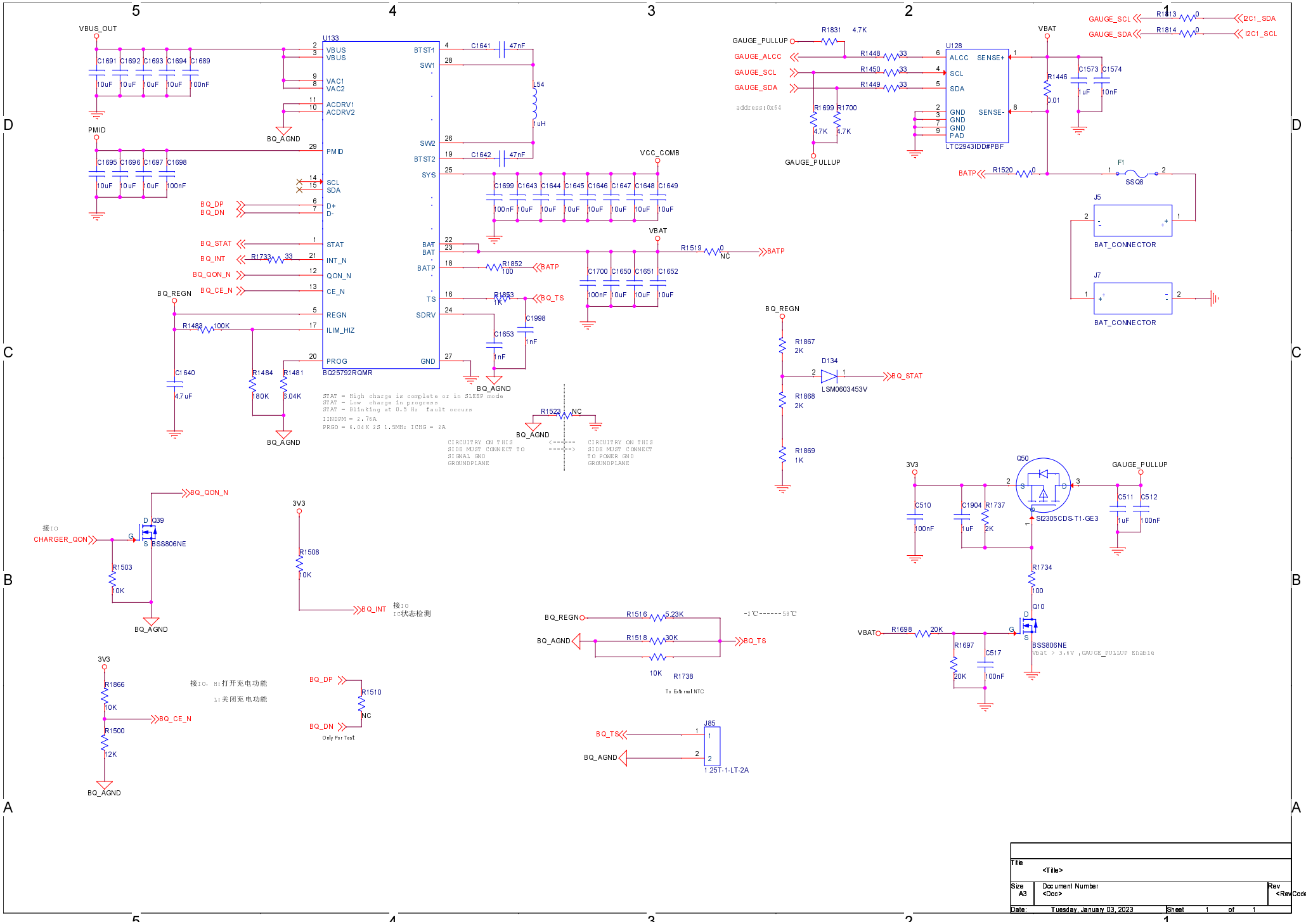

VBUS_OUT
U133
VBUS
VAC1
VAC2
ACDRV1
ACDRV2
PMID
SCL
SDA
D+
D-
STAT
INT_N
QON_N
CE_N
REGN
ILIM_HIZ
PROG
BQ25792RQMR
BTST1
SW1
SW2
BTST2
SYS
BAT
BATP
TS
SDRV
GND
BQ_AGND
BQ_DP
BQ_DN
BQ_STAT
BQ_INT
BQ_QON_N
BQ_CE_N
BQ_REGN
BQ_TS
VCC_COMB
VBAT
BATP
STAT = High charge is complete or in SLEEP mode
STAT = Low charge in progress
STAT = Blinking at 0.5 Hz fault occurs
IINDPM = 2.76A
PRGO = 6.04K 2S 1.5MHz ICHG = 2A
CIRCUITRY ON THIS SIDE MUST CONNECT TO SIGNAL GND GROUNDPLANE
CIRCUITRY ON THIS SIDE MUST CONNECT TO POWER GND GROUNDPLANE
GAUGE_PULLUP
GAUGE_ALCC
GAUGE_SCL
GAUGE_SDA
address:0x64
U128
ALCC
SCL
SDA
GND
PAD
SENSE+
SENSE-
LTC2943IDD#PBF
I2C1_SDA
I2C1_SCL
F1
SSQ8
J5
BAT_CONNECTOR
J7
BAT_CONNECTOR
D134
LSM0603453V
Q50
SI2305CDS-T1-GE3
Q39
BSS806NE
CHARGER_QON
接IO
3V3
接IO
IC状态检测
接IO, H:打开充电功能
L:关闭充电功能
Only For Test
R1738
To External NTC
J85
1.25T-1-LT-2A
Q10
BSS806NE
Vbat > 3.6V ,GAUGE_PULLUP Enable
Title
<Title>
Size
A3
Document Number
<Doc>
Rev
<RevCode
Date: Tuesday, January 03, 2023
Sheet 1 of 1

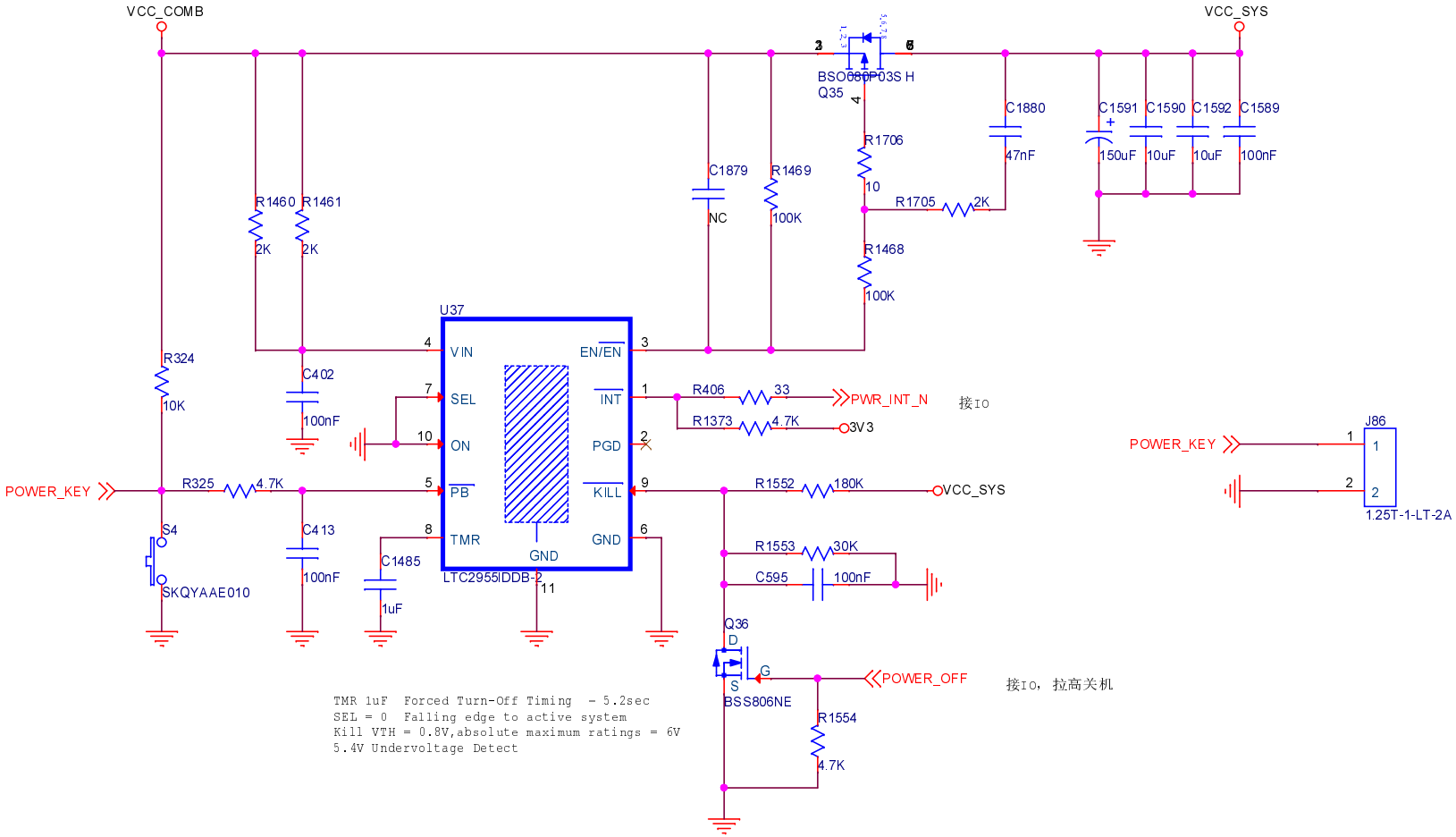

Title	<Title>	
Size A4	Document Number <Doc>	Rev <RevC
Date: Thursday, December 01, 2022	Sheet 1 of 1	

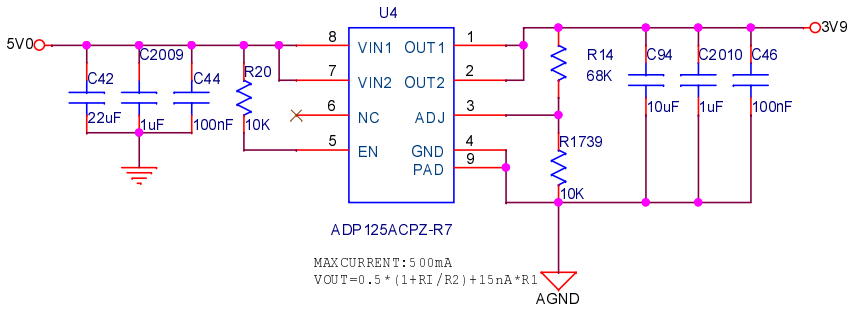

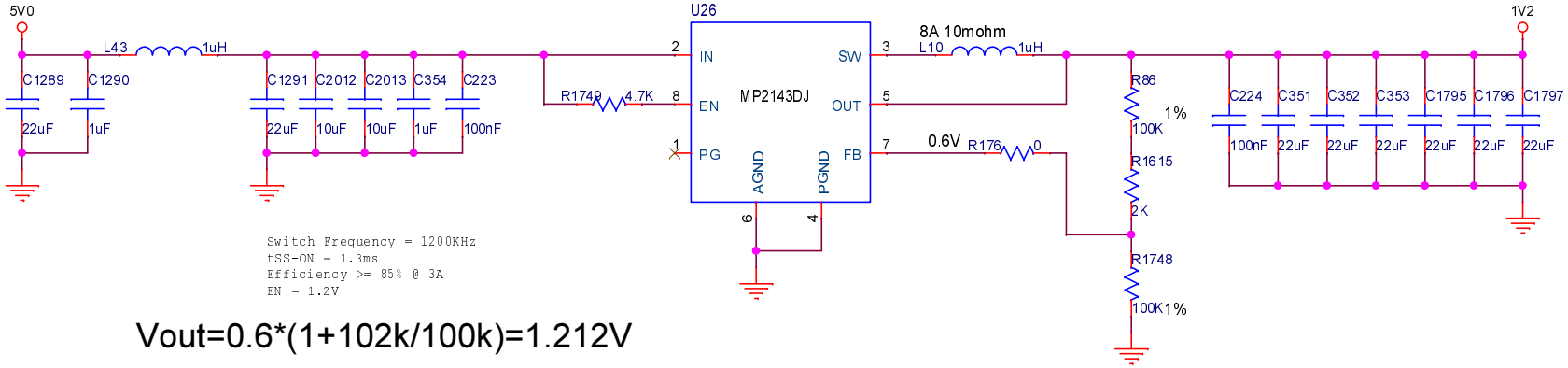

Switch Frequency = 1200KHz
tSS-ON = 1.3ms
Efficiency >= 85% @ 3A
EN = 1.2V

Vout=0.6*(1+102k/100k)=1.212V

Title	<Title>	
Size A4	Document Number <Doc>	Rev <RevC
Date: Saturday, December 17, 2022	Sheet 1 of 1	

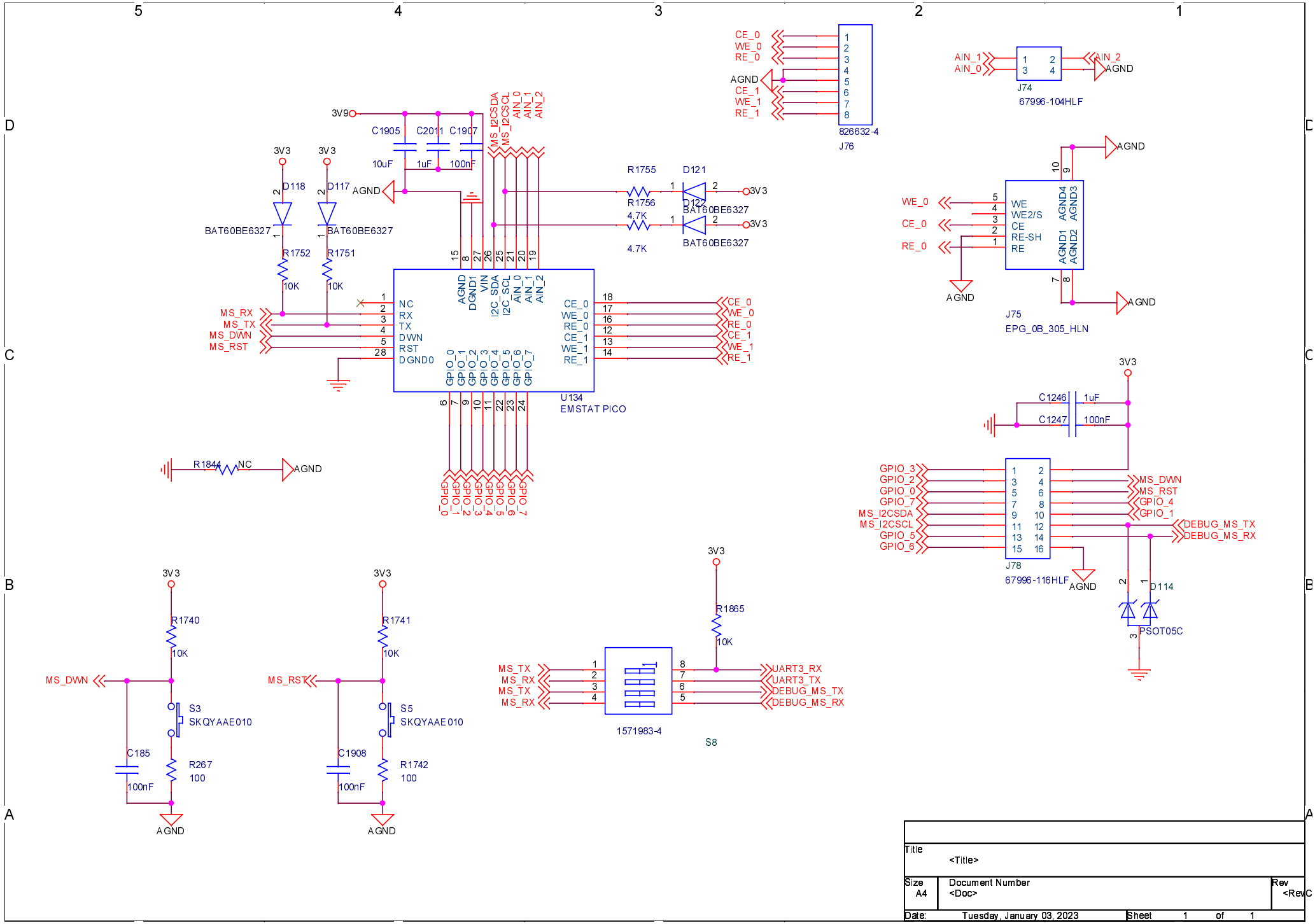

Title	<Title>	
Size A4	Document Number <Doc>	Rev <RevC
Date: Tuesday, January 03, 2023	Sheet 1 of 1	

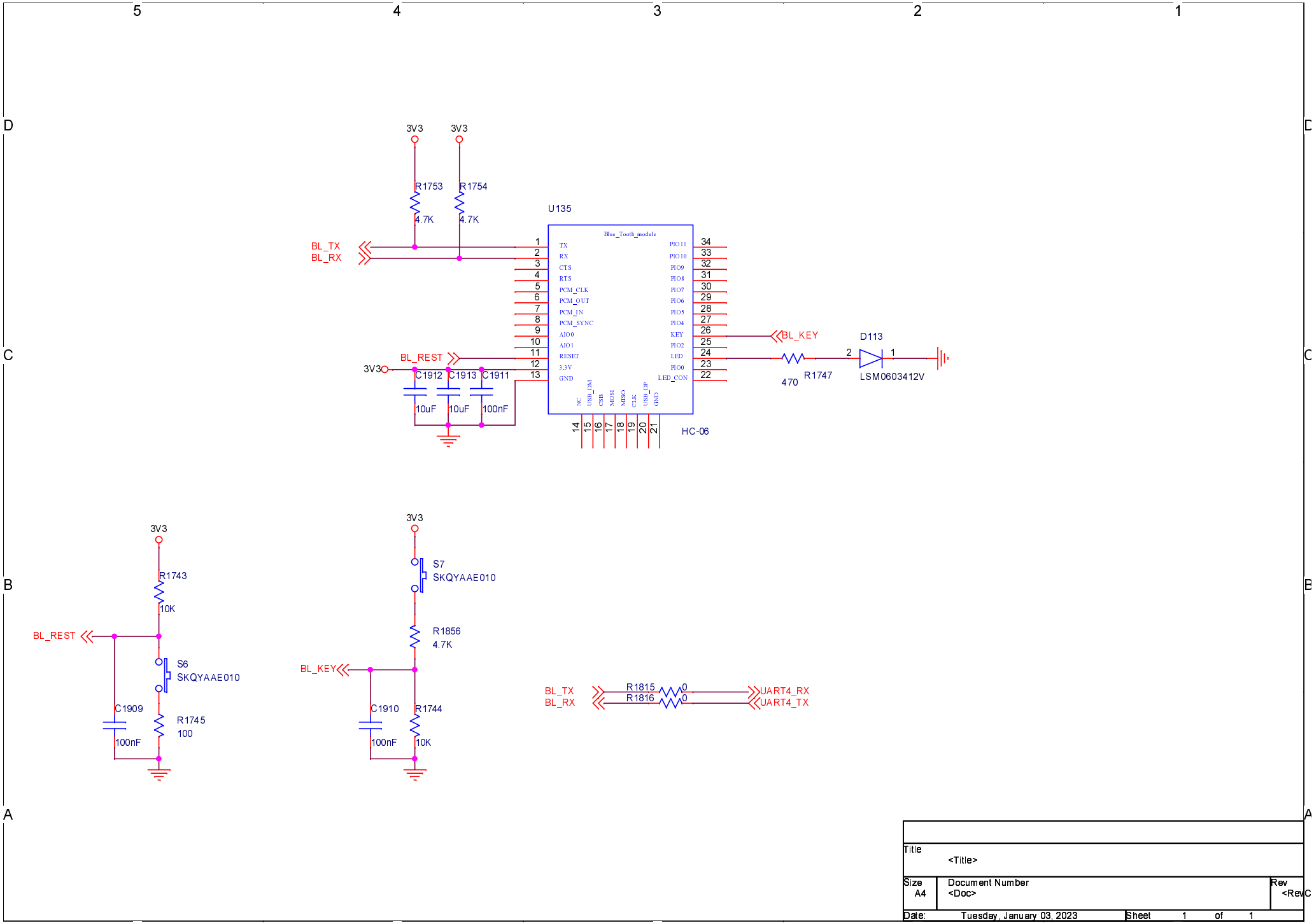

Title	<Title>	
Size A4	Document Number <Doc>	Rev <RevC
Date: Tuesday, January 03, 2023	Sheet 1 of 1	

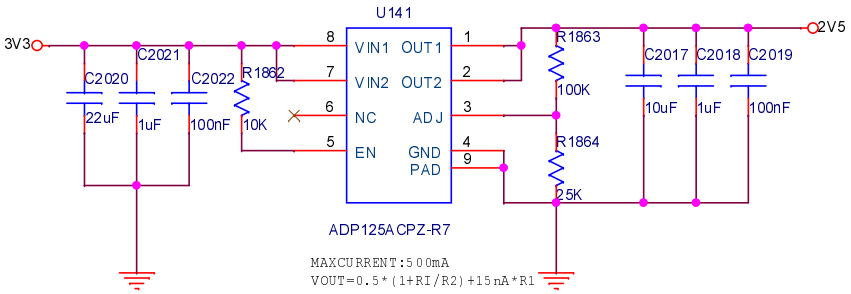

Title <Title>		
Size A4	Document Number <Doc>	Rev <RevCo
Date: Friday, December 30, 2022	Sheet 1 of 1	

SDIO3.0

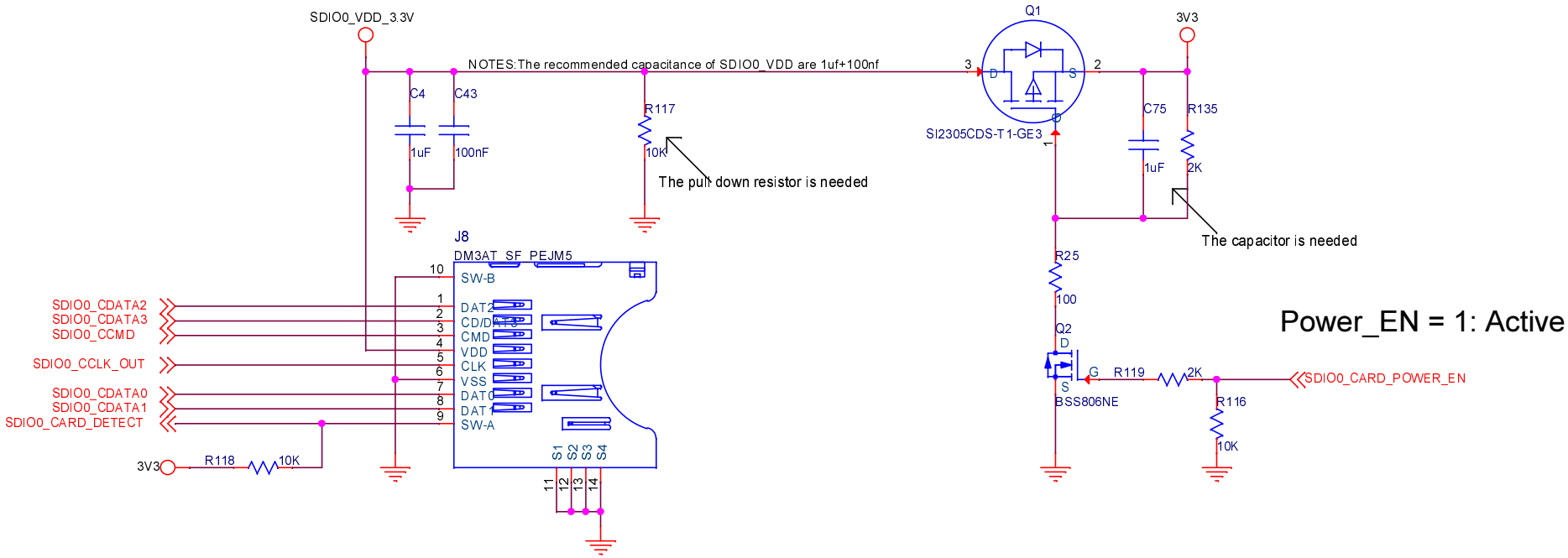

Project Name: MFCODEC	
Designer: LY	Size A4 Ver B
Date: Thursday, January 12, 2023	Sheet 11 of 31

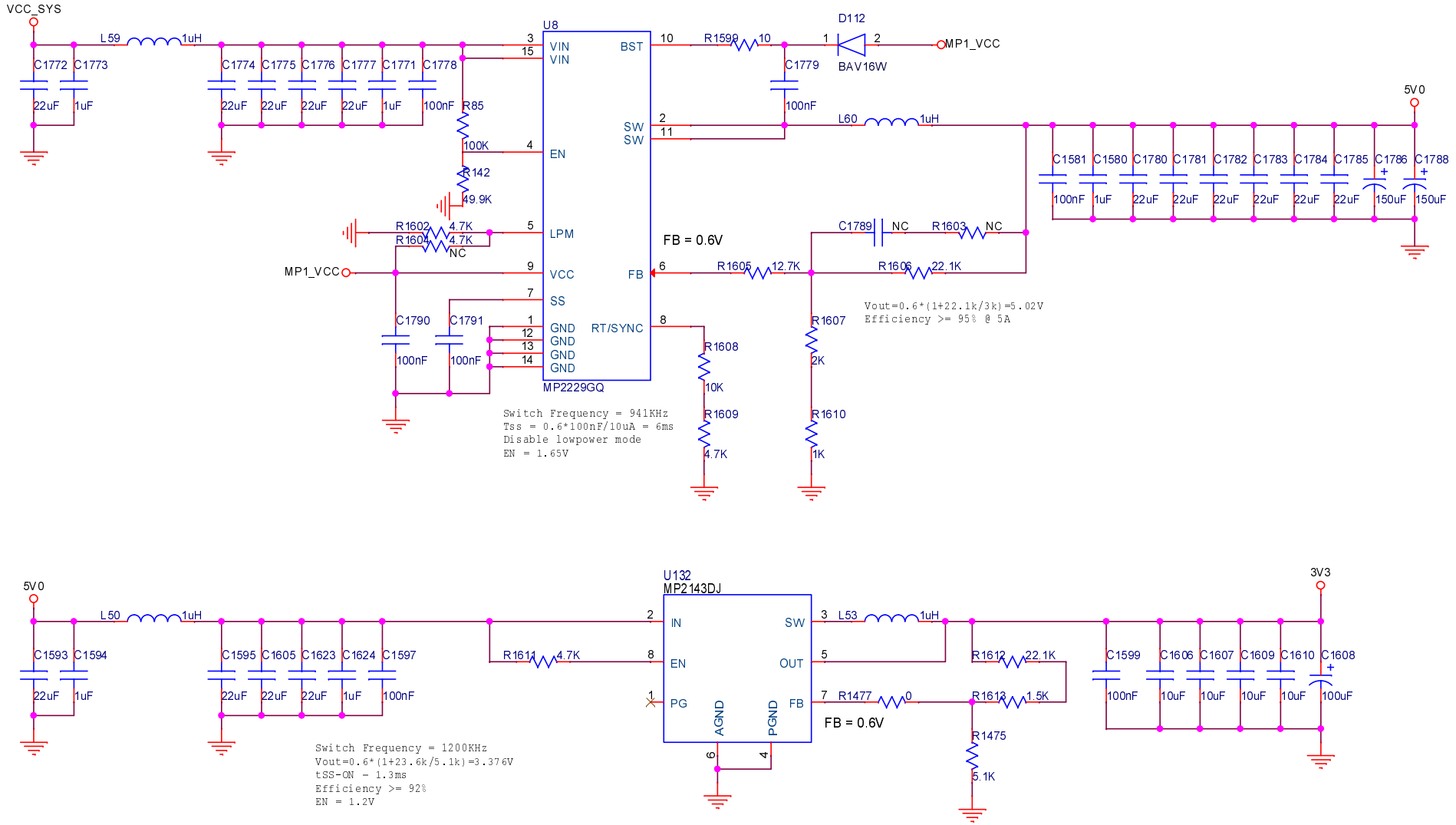

Project Name: MFCODEC	
Designer: LY	Size A4 Ver B
Date: Thursday, January 12, 2023	Sheet 28 of 31