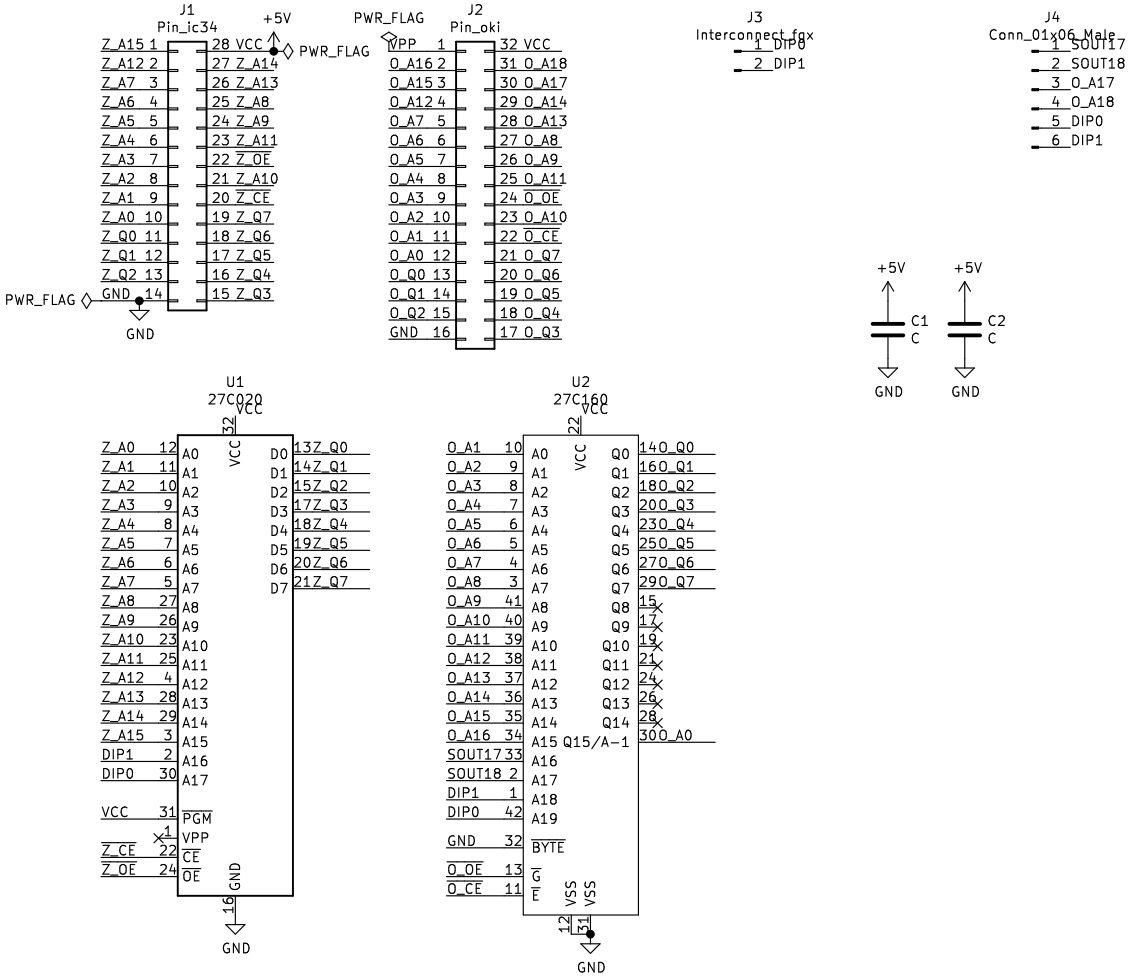

Yukari

Sheet: /

File: SUN-06-MULTI-SND.sch

Title: SUN-06-MULTI-SND

Size: A4	Date: 2019-01-27	**Rev: v1.1**
KiCad E.D.A. kicad (5.0.1-3-g963ef8bb5)		Id: 1/1