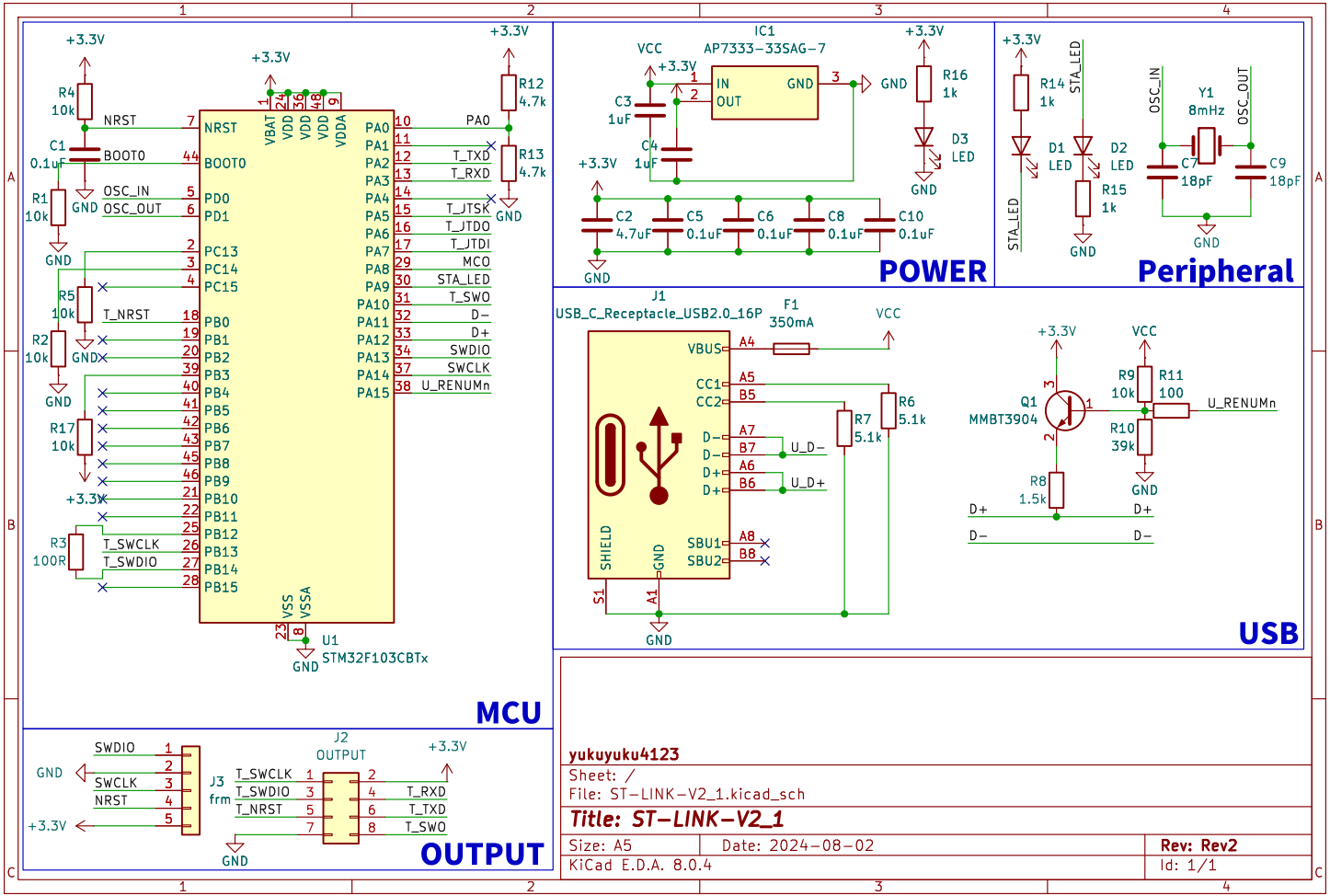
MCU
U1
STM32F103CBTx
NRST
BOOT0
OSC_IN
OSC_OUT
T_NRST
T_SWCLK
T_SWDIO
PA0
T_TXD
T_RXD
T_JTSK
T_JTDO
T_JTDI
MCO
STA_LED
T_SWO
D−
D+
SWDIO
SWCLK
U_RENUMn
POWER
IC1
AP7333−33SAG−7
VCC
R16
1k
D3
LED
Peripheral
R14
1k
D1
LED
D2
LED
R15
1k
Y1
8mHz
C7
18pF
C9
18pF
USB
J1
USB_C_Receptacle_USB2.0_16P
F1
350mA
R6
5.1k
R7
5.1k
U_D−
U_D+
Q1
MMBT3904
R9
10k
R11
100
R10
39k
R8
1.5k
OUTPUT
J2
OUTPUT
J3
frm
yukuyuku4123
Sheet: /
File: ST−LINK−V2_1.kicad_sch
Title: ST−LINK−V2_1
Size: A5
Date: 2024−08−02
Rev: Rev2
KiCad E.D.A. 8.0.4
Id: 1/1