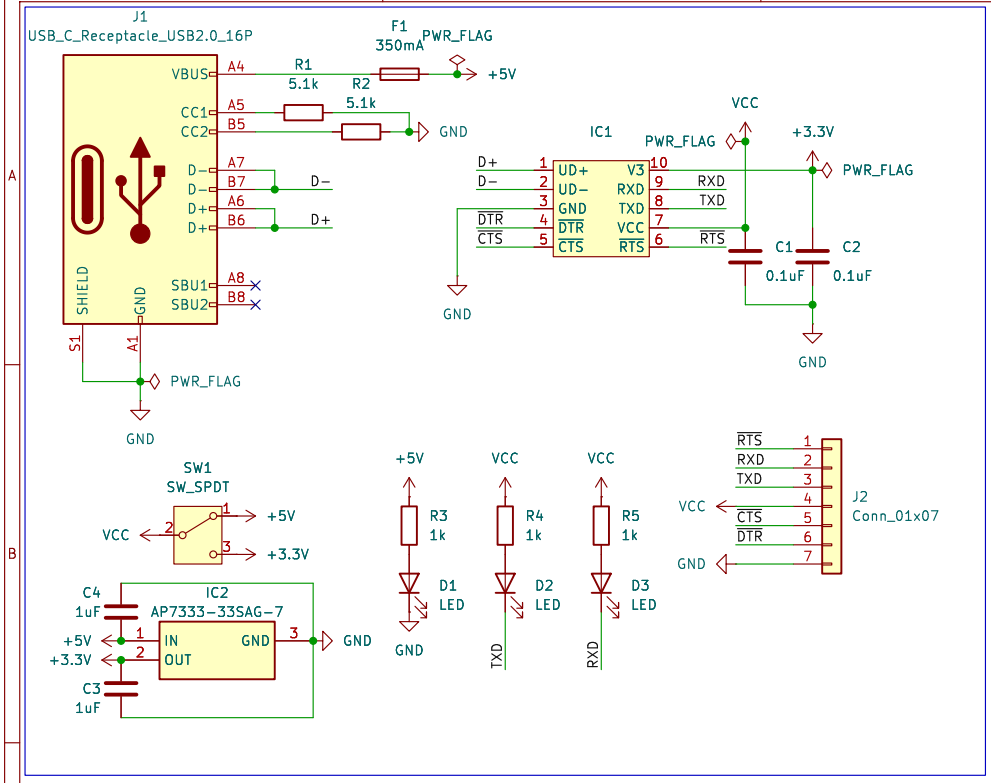


https://github.com/zukki4123
https://twitter.com/yukuyuku4123
**yukuyuku4123**

Sheet: /
File: UART_Programmer.kicad_sch

**Title: UART_Programmer**

| | | |
|---|---|---|
| Size: A4 | Date: 2024−06−29 | **Rev:** |
| KiCad E.D.A. 8.0.1 | | Id: 1/1 |