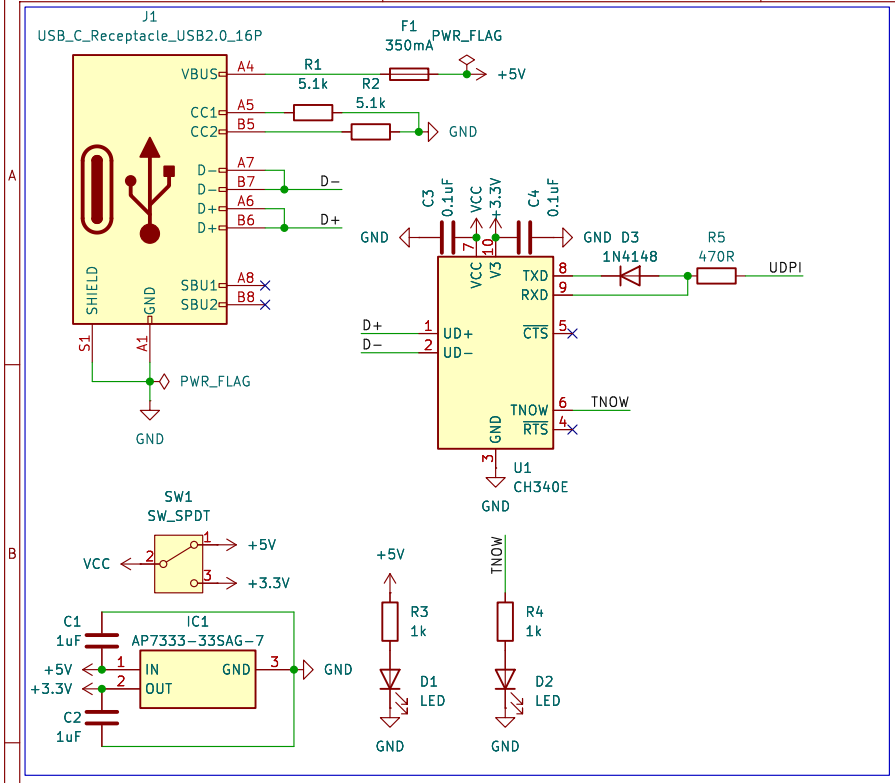

https://github.com/zukki4123
https://twitter.com/yukuyuku4123
yukuyuku4123

Sheet: /
File: UDPI_Programmer.kicad_sch

Title: UDPI_Programmer

Size: A4	Date: 2024-06-30	**Rev:**
KiCad E.D.A. 8.0.1		Id: 1/1