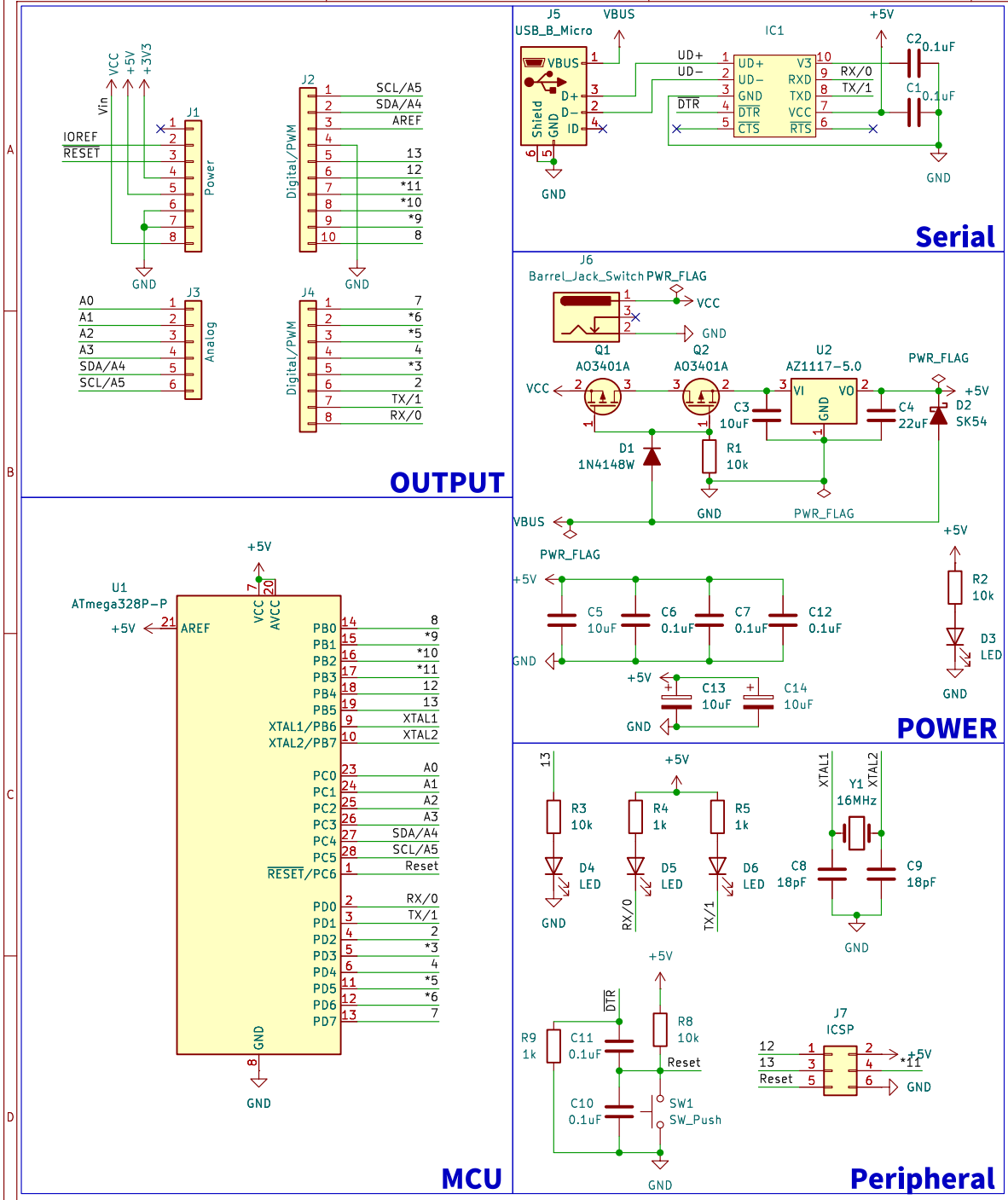

yukuyuku4123

Sheet: /

File: yukuyukuUNO.kicad_sch

Title: yukuyukuUNO

Size: A4	Date: 2024-07-28	Rev: 3
KiCad E.D.A. 8.0.1		Id: 1/1